US 20210222841A1

(19) United States

(12) Patent Application Publication

(10) Pub. No.: US 2021/0222841 A1

(43) Pub. Date: Jul. 22, 2021

Xu

(54) **AUTOMOTIVE LED LIGHT SOURCE WITH GLASS LENS OVER A GLASS CONVERTER PLATE CONTAINING PHOSPHOR**

(71) Applicant: **Bridgelux, Inc.**, Fremont, CA (US)

(72) Inventor: **Tao Xu**, Fremont, CA (US)

(21) Appl. No.: **17/226,080**

(22) Filed: **Apr. 9, 2021**

Related U.S. Application Data

(63) Continuation of application No. 16/266,094, filed on Feb. 3, 2019, now Pat. No. 10,982,823.

(60) Provisional application No. 62/639,946, filed on Mar. 7, 2018.

Publication Classification

(51) **Int. Cl.**

F21K 9/64	(2006.01)
F21S 41/151	(2006.01)
H01L 25/075	(2006.01)
H01L 33/50	(2006.01)
H01L 33/60	(2006.01)
H01L 33/62	(2006.01)

(52) **U.S. Cl.**

CPC ***F21K 9/64*** (2016.08); ***F21S 41/151*** (2018.01); ***H01L 25/0753*** (2013.01); ***H01L 33/62*** (2013.01); ***H01L 33/505*** (2013.01); ***H01L 33/60*** (2013.01); ***H01L 33/502*** (2013.01)

(57) **ABSTRACT**

A lighting system that is part of a headlight module of a motor vehicle includes an array of LED light sources that include no organic materials. Each light source includes a glass lens attached to a phosphor glass converter plate, which itself is attached to an LED die that is flip-chip mounted on a mounting substrate. The converter plate includes phosphor particles embedded in glass. Each lens is disposed laterally over a single LED die. The converter plate is attached to the LED die by a first bonding layer, and the lens is attached to the converter plate by a second bonding layer. Both bonding layers are made of a metal oxide and are thinner than the converter plate. Either each lens does not extend horizontally outside the lateral boundary of each converter plate, or the lens portions centered on each LED die are part of a unitary lens array.

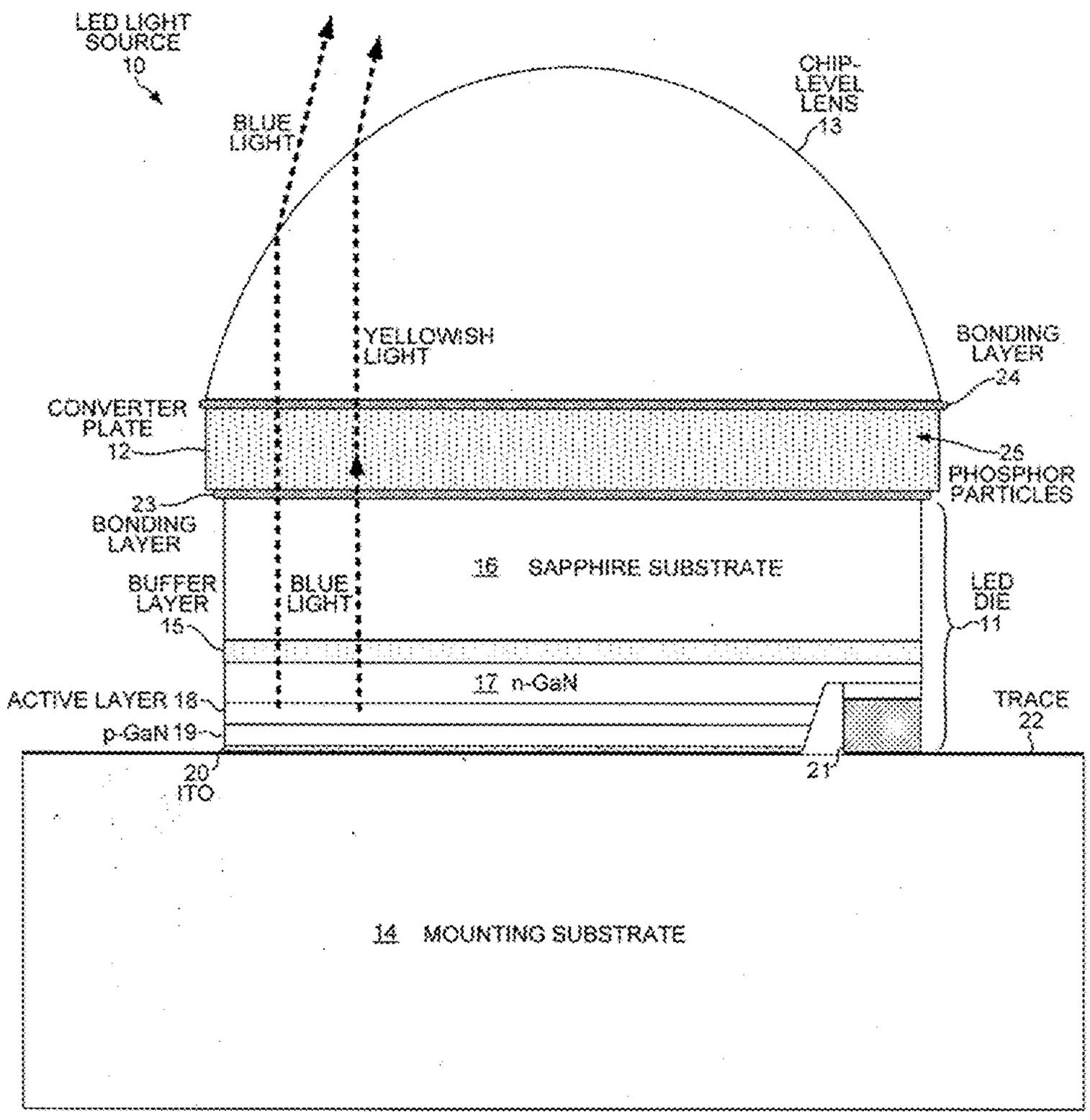

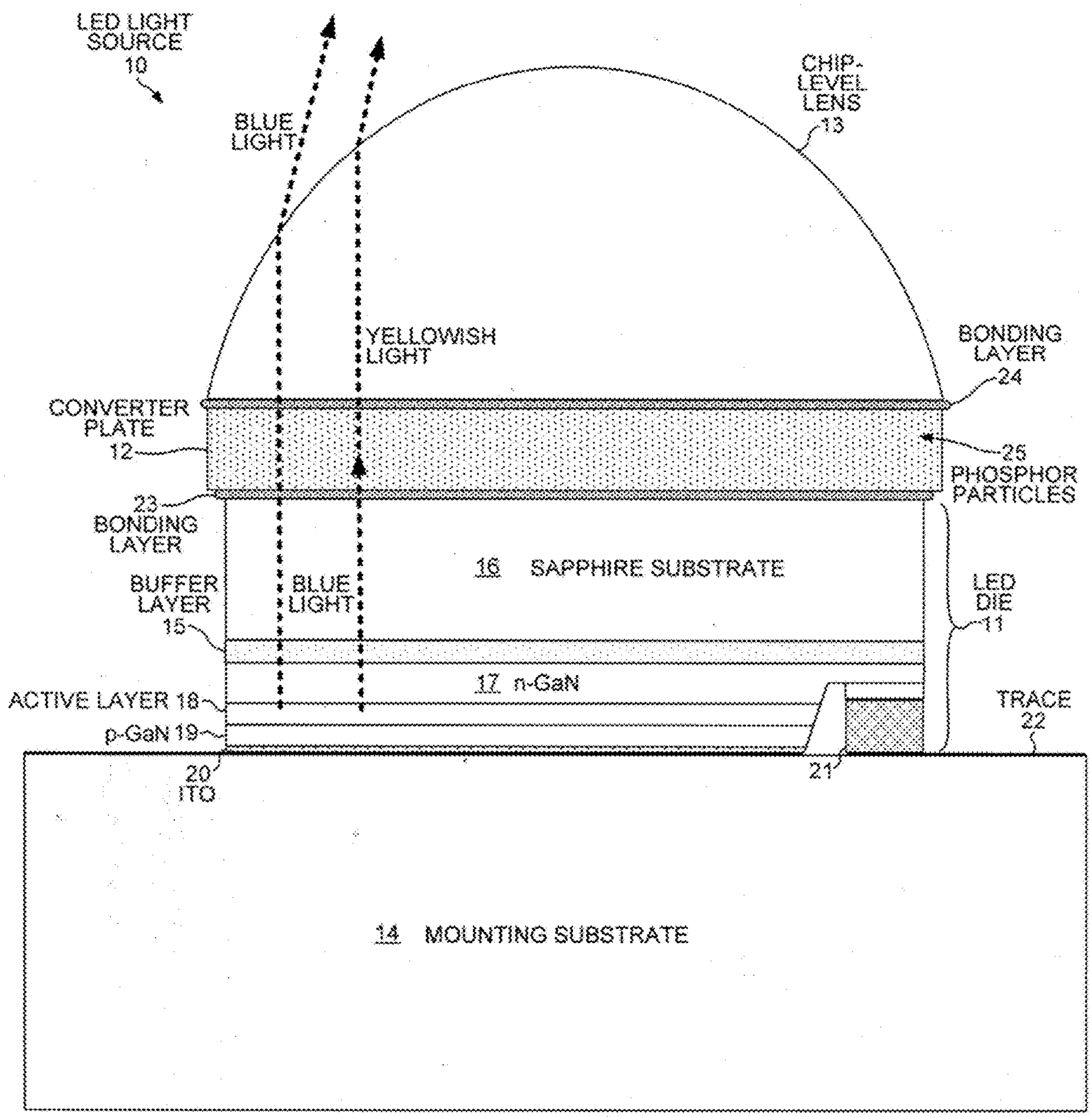
LED LIGHT SOURCE 10
BLUE LIGHT
CHIP-LEVEL LENS 13
YELLOWISH LIGHT
BONDING LAYER 24
CONVERTER PLATE 12
25 PHOSPHOR PARTICLES
23 BONDING LAYER
16 SAPPHIRE SUBSTRATE
BUFFER LAYER 15
BLUE LIGHT
LED DIE 11
17 n-GaN
ACTIVE LAYER 18
p-GaN 19
TRACE 22
20 ITO
21
14 MOUNTING SUBSTRATE

FIG. 1

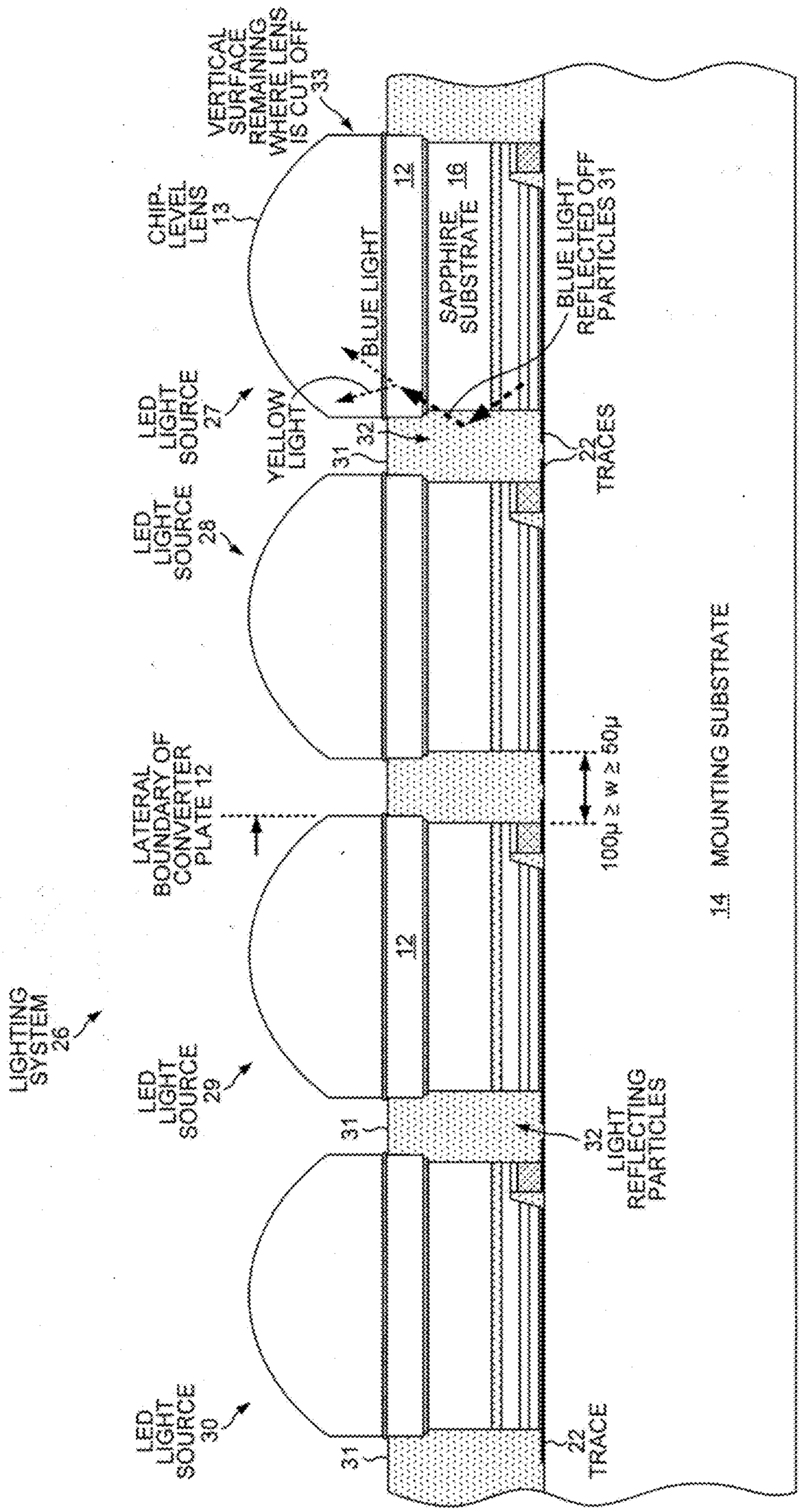
LIGHTING SYSTEM 26
LED LIGHT SOURCE 27
LED LIGHT SOURCE 28
LED LIGHT SOURCE 29
LED LIGHT SOURCE 30
CHIP-LEVEL LENS 13
VERTICAL SURFACE REMAINING WHERE LENS IS CUT OFF 33
LATERAL BOUNDARY OF CONVERTER PLATE 12
12
12
BLUE LIGHT
YELLOW LIGHT
SAPPHIRE SUBSTRATE 16
BLUE LIGHT REFLECTED OFF PARTICLES 31
31
32
31
31
22 TRACES
100μ ≥ w ≥ 50μ
14 MOUNTING SUBSTRATE
32 LIGHT REFLECTING PARTICLES
22 TRACE

FIG. 2

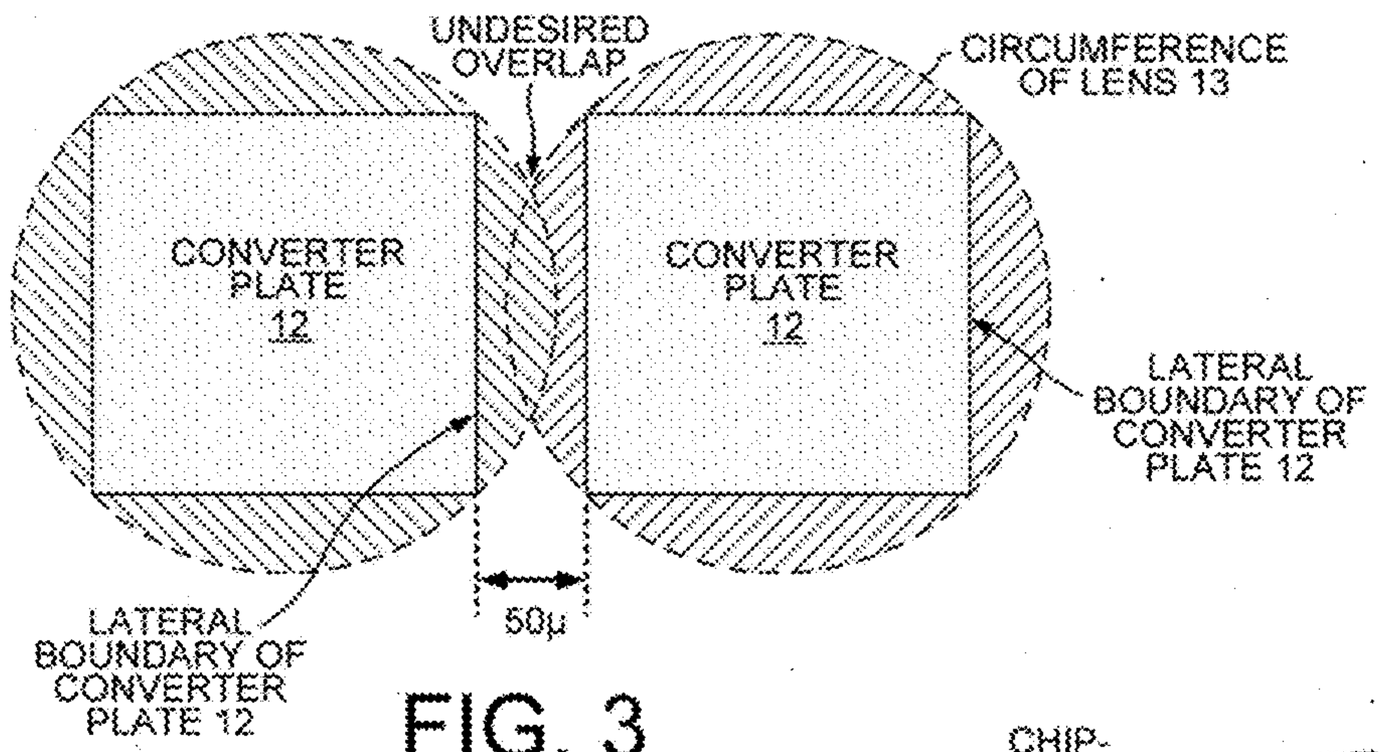

FIG. 3

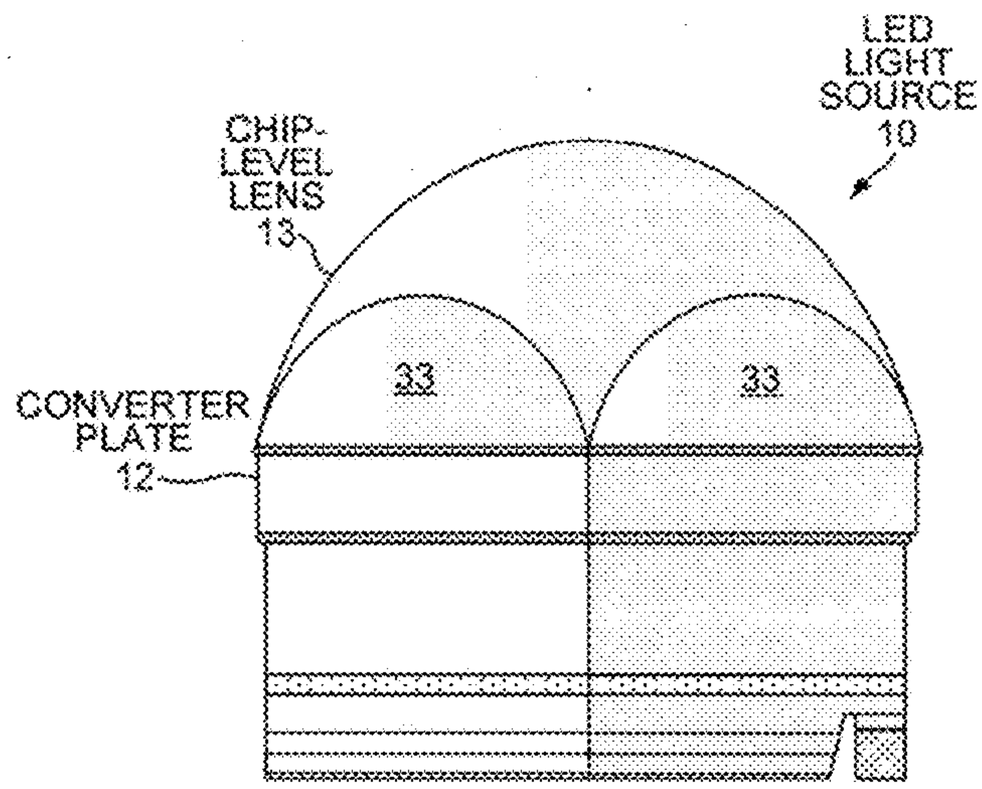

FIG. 4

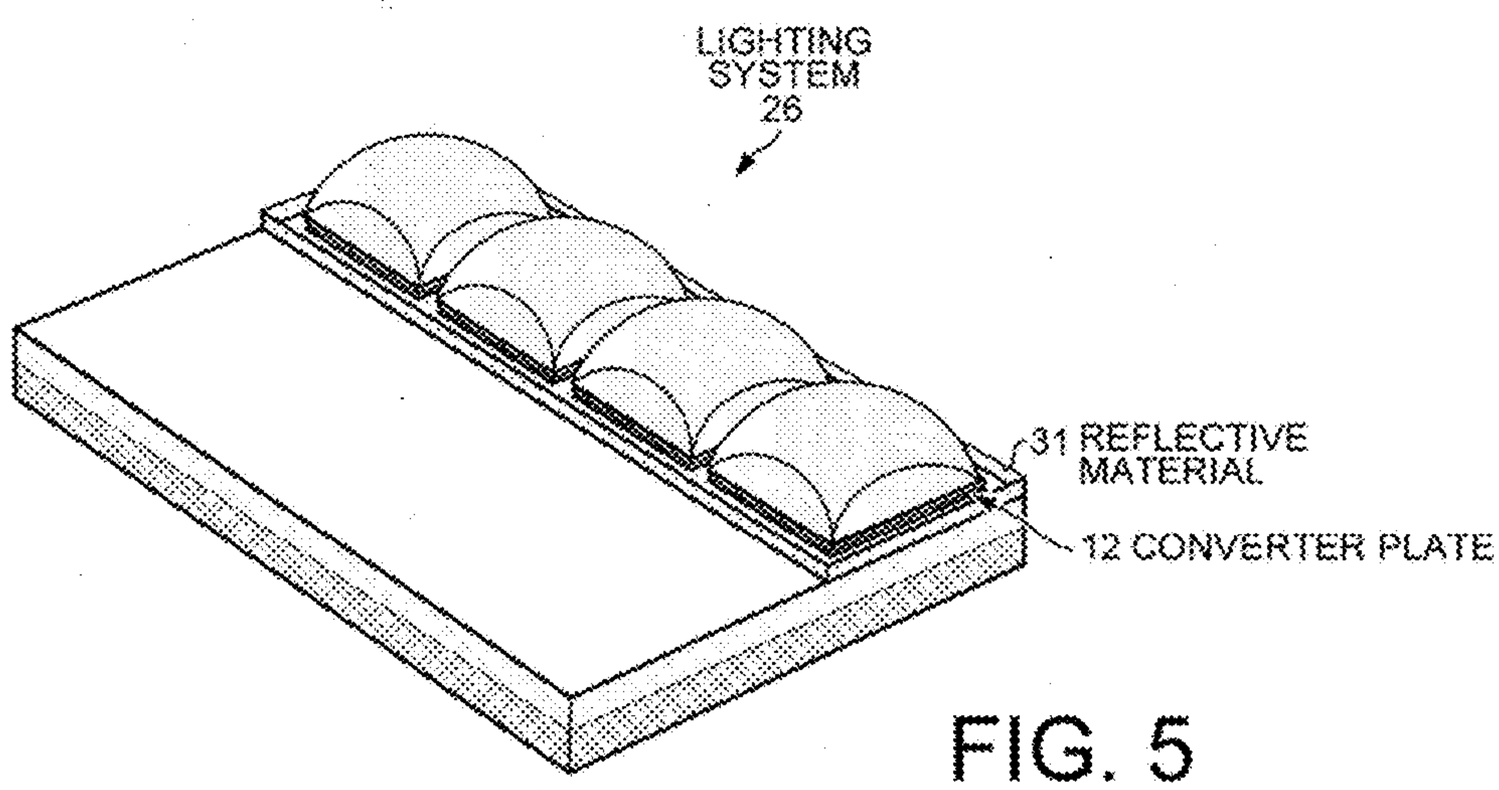

FIG. 5

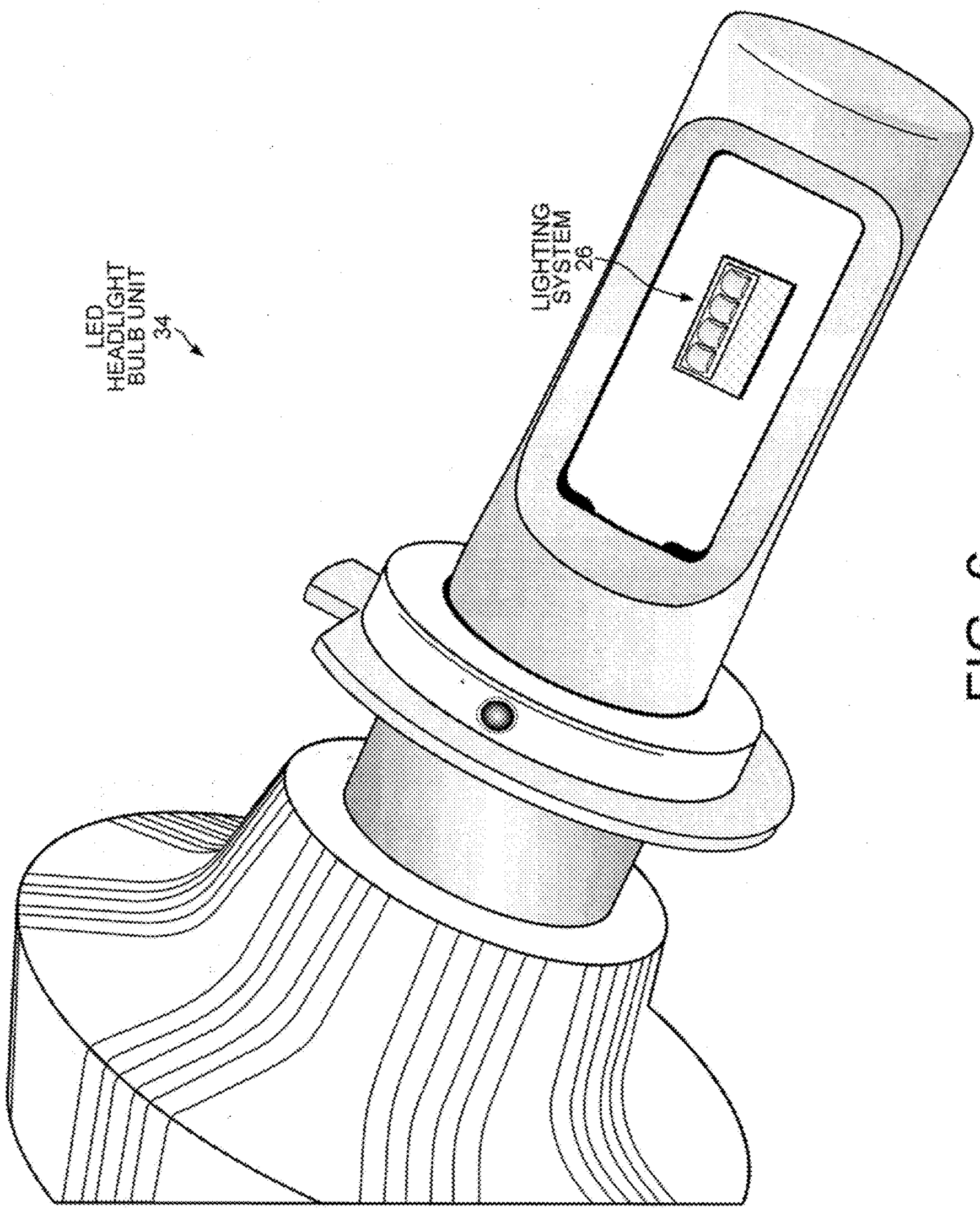

FIG. 6

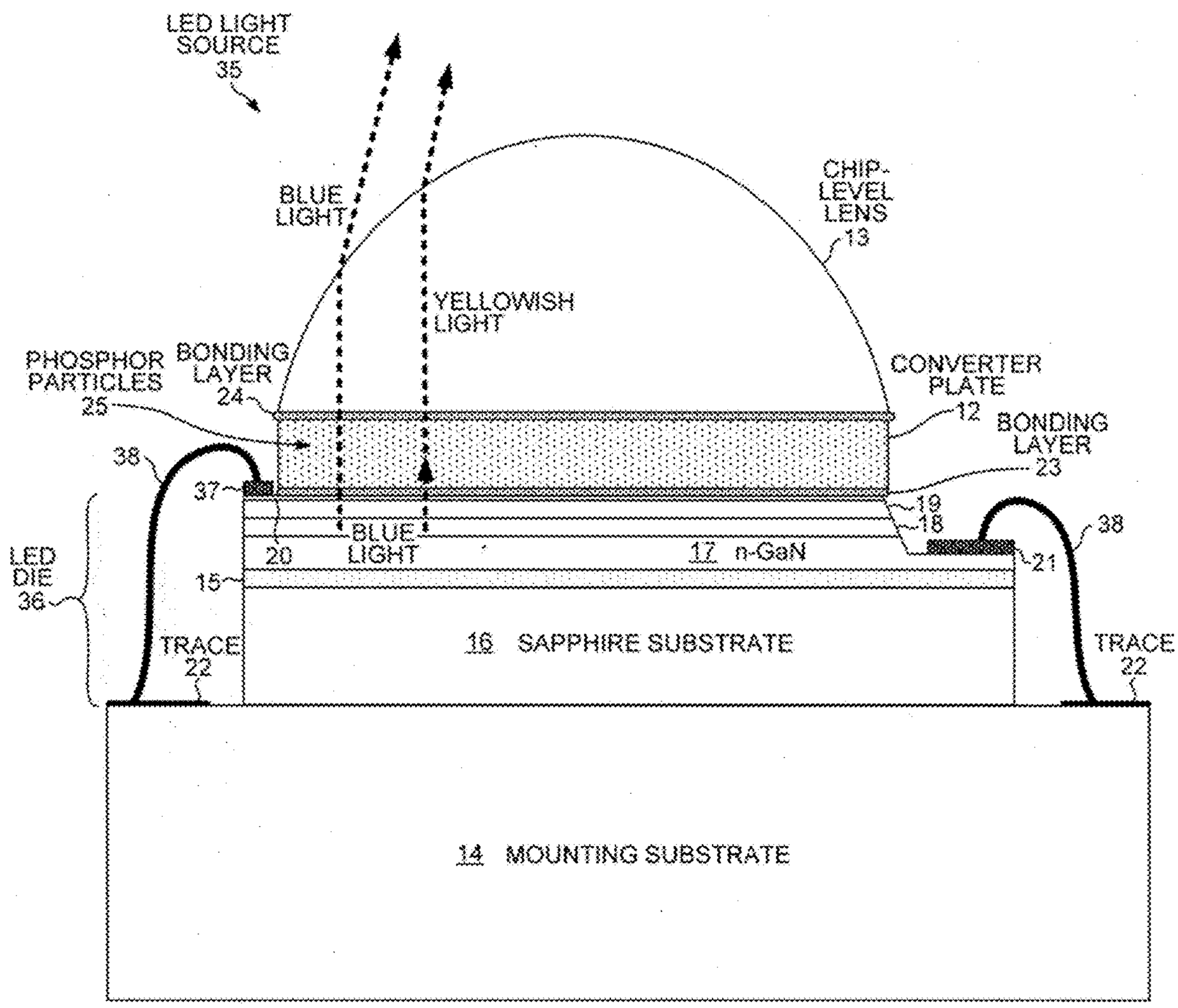
LED LIGHT SOURCE 35
BLUE LIGHT
YELLOWISH LIGHT
CHIP-LEVEL LENS 13
PHOSPHOR PARTICLES 25
BONDING LAYER 24
CONVERTER PLATE 12
BONDING LAYER 23
38
37
19
18
38
LED DIE 36
20
BLUE LIGHT
17 n-GaN
21
15
TRACE 22
16 SAPPHIRE SUBSTRATE
TRACE 22
14 MOUNTING SUBSTRATE

FIG. 7

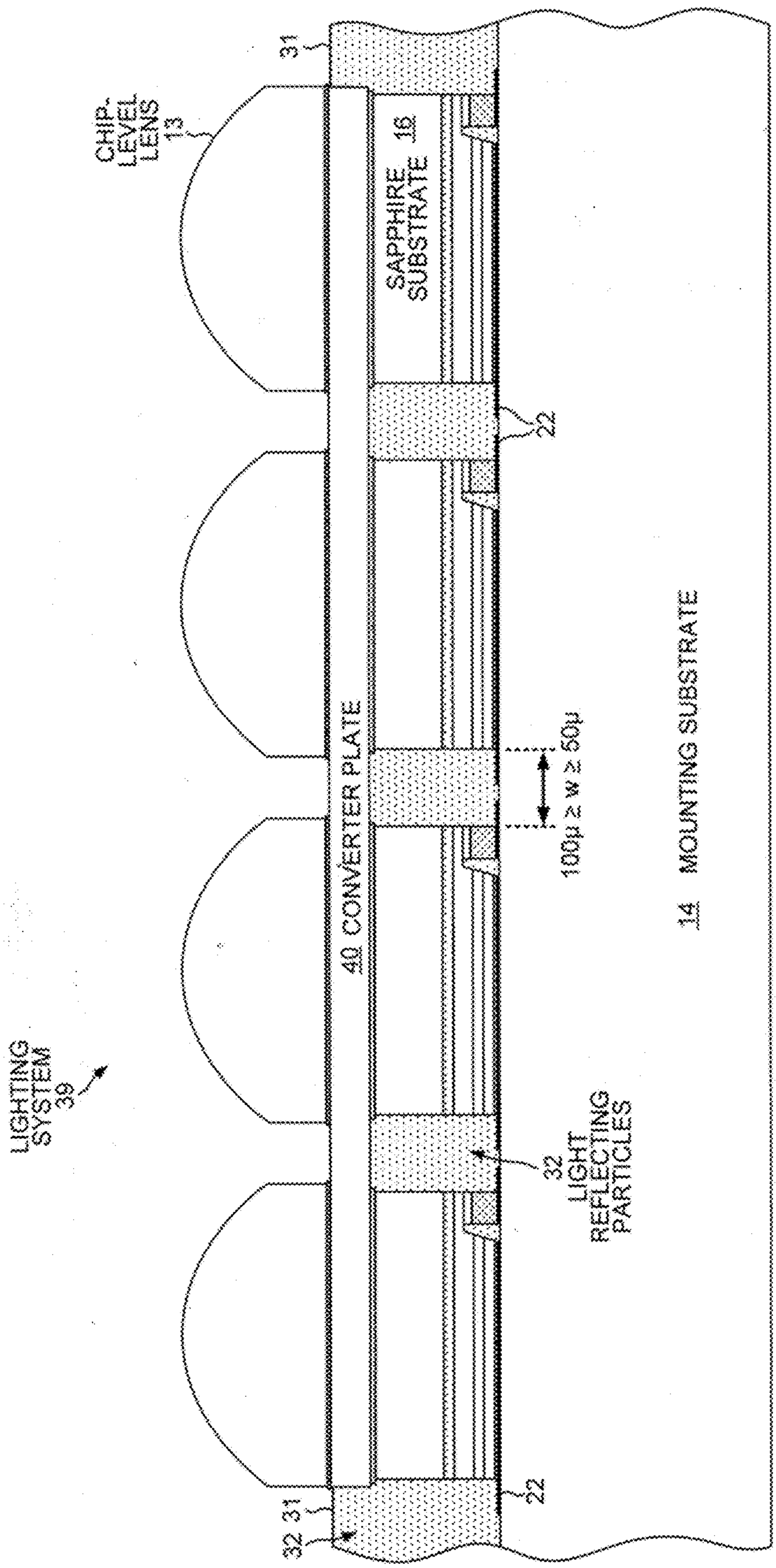
CHIP-LEVEL LENS 13
31
SAPPHIRE SUBSTRATE 16
22
40 CONVERTER PLATE
100μ ≥ w ≥ 50μ
14 MOUNTING SUBSTRATE
LIGHTING SYSTEM 39
32 LIGHT REFLECTING PARTICLES
32 31
22

FIG. 8

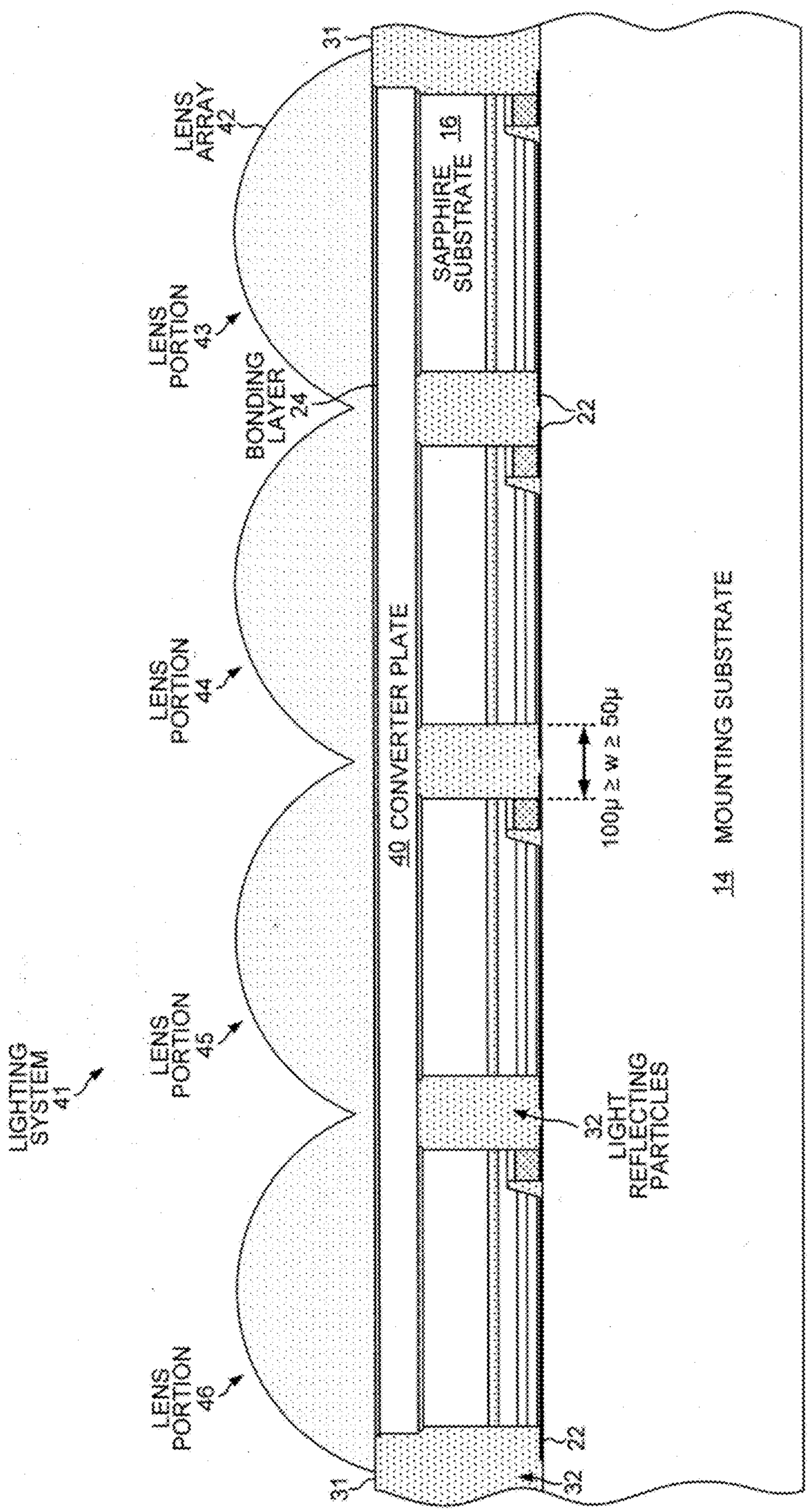
LIGHTING SYSTEM 41
LENS PORTION 46
LENS PORTION 45
LENS PORTION 44
LENS PORTION 43
LENS ARRAY 42
31
31
BONDING LAYER 24
SAPPHIRE SUBSTRATE 16
22
22
40 CONVERTER PLATE
100μ ≥ w ≥ 50μ
14 MOUNTING SUBSTRATE
32 LIGHT REFLECTING PARTICLES
32

FIG. 9

AUTOMOTIVE LED LIGHT SOURCE WITH GLASS LENS OVER A GLASS CONVERTER PLATE CONTAINING PHOSPHOR

CROSS REFERENCE TO RELATED APPLICATIONS

[0001] This application is a continuation of, and claims priority under 35 U.S.C. § 120 from, nonprovisional U.S. patent application Ser. No. 16/266,094 entitled "Automotive LED Light Source with Glass Lens Over a Glass Converter Plate Containing Phosphor," filed on Feb. 3, 2019, the subject matter of which is incorporated herein by reference. Application Ser. No. 16/266,094, in turn, claims priority under 35 U.S.C. § 119 from U.S. Provisional Application No. 62/639,946, entitled "Automotive LED Light Source with Glass Lens Over a Glass Converter Plate Containing Phosphor," filed on Mar. 7, 2018, the subject matter of which is incorporated herein by reference.

TECHNICAL FIELD

[0002] The present invention relates to LEDs used in automotive applications, such as in vehicle headlights.

BACKGROUND INFORMATION

[0003] Light sources using light emitting diodes (LEDs) are increasingly being used for vehicle headlights because the LEDs exhibit lower power consumption and have a longer operational life than do the halogen or high-intensity-discharge (HID) lamps previously used for vehicle headlights. However, typical LED light sources that are used in automotive applications do not display the same reliability that is achievable with LEDs in other applications. For example, the LEDs in vehicle headlights are driven with large currents in order to produce the high-intensity white light needed for high beam headlights. The white light is obtained using phosphor that converts some of the blue light generated by Gallium Nitride (GaN) LEDs into longer wavelength light so that the combined light emitted by the LED light source will have a wider band of wavelengths and will appear whiter. Particles of phosphor are typically held in silicone or epoxy resins deposited over the LED dies. The large currents used to generate high-intensity white light generate large amounts of heat that is difficult to extract completely with heat sinks and that inevitably raises the temperature of the automotive LED light sources beyond the usual operating temperatures of LEDs in other lighting applications. The LEDs in light sources for general lighting applications typically have operating temperatures that do not exceed 105° C. over extended periods. However, the operating temperature for LEDs in vehicle headlights can often reach 125° C.

[0004] The emission efficiency and light intensity of LEDs in vehicle headlights is often reduced because the resin matrix of the silicone and epoxy that hold the phosphor particles deform under the extended periods of high temperature and the vibration and bumping from road conditions while the resins are at the elevated temperatures. A design for an LED light source is sought that can produce high-intensity white light in an automotive application with at least the same reliability that is currently achievable with LEDs used in other lighting applications that have lower maximum operating temperatures and that involve less vibration.

SUMMARY

[0005] A lighting system that is part of a headlight module of a motor vehicle includes an array of LED light sources. The light sources include no organic materials such as silicone or epoxy, whose matrix structures break down under the combination of high temperature, humidity and vibration associated with the operating conditions of a vehicle headlight. Each LED light source includes a glass lens attached on top of a converter plate of phosphor glass. The converter plate is attached on top of an LED die that is flip-chip mounted to a mounting substrate. The LED die has surface mount contacts that include an n-contact and a p-contact. An n-trace and a p-trace are disposed on a top surface of the mounting substrate. The n-contact directly contacts the n-trace, and the p-contact directly contacts the p-trace.

[0006] The converter plate includes phosphor particles embedded in glass or ceramic. Each lens is disposed laterally over a single LED die such that there is one lens per LED die. The converter plate is attached to the LED die by a first bonding layer, and the lens is attached to the converter plate by a second bonding layer. Each of the bonding layers is made of a metal oxide and is thinner than the converter plate. The converter plate has a thickness of 60-100 microns, and each of the bonding layers is less than one micron thick. A reflective material includes light scattering particles dispersed in a transparent carrier. The reflective material is disposed between a first LED light source and a second LED light source of the array.

[0007] In one embodiment, each lens does not extend horizontally outside the lateral boundary of each converter plate. For example, the portions of a hemispherical lens that would extend outside the lateral square boundary of the converter plate are cut off. The LED light sources can be spaced closely together at a separation of 50-100 microns because the edges of the lens are truncated and do not extend beyond the lateral boundary of the converter plate or the LED die. In another embodiment, each lens portion of a unitary lens array is centered over each LED die. The unitary lens array covers multiple LED light sources. The lens portions are arranged on the unitary lens array such that the LED light sources can be spaced closely together at a separation of 50-100 microns. In yet another embodiment, the converter plate of one LED light source and the converter plate of another LED light source are portions of a unitary converter plate that covers multiple LED dies.

[0008] Further details and embodiments and techniques are described in the detailed description below. This summary does not purport to define the invention. The invention is defined by the claims.

BRIEF DESCRIPTION OF THE DRAWINGS

[0009] The accompanying drawings, where like numerals indicate like components, illustrate embodiments of the invention.

[0010] FIG. **1** is a cross-sectional view of an LED light source used in a vehicle headlight that includes an LED die, a converter plate and a lens.

[0011] FIG. **2** is a cross-sectional view of a lighting system that includes a linear array of four LED light sources of the type shown in FIG. **1**.

[0012] FIG. **3** illustrates the undesired overlap of lenses on adjacent light sources that are tightly spaced if the portions

of the lenses that extend beyond the lateral boundaries of the converter plates are not cut off.

[0013] FIG. **4** shows an LED light source of the type shown in FIG. **1** viewed from a corner such that two adjacent sides of the light source are visible.

[0014] FIG. **5** is a perspective view of the lighting system of FIG. **2** showing four truncated chip-level lenses mounted on the converter plates of the four light sources.

[0015] FIG. **6** is a perspective view of the lighting system of FIG. **5** mounted in an LED headlight bulb unit for use in a motor vehicle.

[0016] FIG. **7** is a cross-sectional view of another embodiment of an LED light source in which a lateral LED die is vertically mounted to a mounting substrate.

[0017] FIG. **8** is a cross-sectional view of another embodiment of a lighting system with a linear array of light sources connected by a common, unitary converter plate of phosphor glass.

[0018] FIG. **9** is a cross-sectional view of yet another embodiment of a lighting system including a linear array of light sources that have a common converter plate and a common, unitary lens array.

DETAILED DESCRIPTION

[0019] Reference will now be made in detail to examples and some embodiments of the invention, examples of which are illustrated in the accompanying drawings. In the description and claims, terms such as "upward", "downward", "upper", "lower", "above", "beneath", "inward" and "outward" are used to describe relative directions and orientations between different elements of the lighting system, and it is to be understood that the overall structure being described can actually be oriented in any way in three-dimensional space.

[0020] FIG. **1** is a cross-sectional view of a single light emitting diode (LED) light source **10** that includes an LED die **11**, a converter plate **12** and a lens **13**. Light source **10** is designed to operate at higher temperatures than conventional white-light LED light sources. For example, light source **10** can operate for extended periods at 125° C. without any loss in the intensity of emitted white light because light source **10** has no phosphor particles embedded in silicone or epoxy resins. Phosphor particles are embedded in converter plate **12**, which is glass or ceramic as opposed to silicone or epoxy. In addition, the total radiant flux of light emitted by light source **10** is increased by the chip-level lens **13**, which is also made of glass or ceramic. Light source **10** can emit about 300 lumens of radiant flux without any significant performance decline over a long operational life in a vehicle headlight. Each vehicle headlight typically includes multiple units of light source **10**.

[0021] In the embodiment of FIG. **1**, LED die **11** of light source **10** is flip-chip mounted onto a mounting substrate **14**. LED die **11** converts electrical energy to light, which is emitted from active layers of semiconductor material sandwiched between oppositely doped layers when a voltage is applied across the doped layers. In the flip-chip orientation of LED die **11** in FIG. **1**, a buffer layer **15** is disposed beneath a sapphire substrate **16**. In the original orientation of the manufacturing steps, however, the buffer layer **15** and other layers are deposited on top of the sapphire substrate. Below buffer layer **15** is the multi-layer epitaxial structure that emits blue light at a wavelength of approximately 450 nm. An n-type gallium nitride (n-GaN) layer **17** is disposed beneath the buffer layer **15**. An active layer **18** is disposed beneath the n-GaN layer **17**, and a p-GaN layer **19** is disposed beneath the active layer **18**. Under the p-GaN layer **19** is a transparent conductive layer **20** of indium tin oxide (ITO). An N-electrode **21** of the LED die **11** is disposed in an N-trench at the right in the diagram and makes electrical contact with the n-GaN layer **17**. The ITO layer **20** forms a P-electrode of the LED die **11**. Conductive traces **22** on the upper surface of the mounting substrate **14** supply current through the N-electrode **21** and the P-electrode to the LED die **11** so that light is emitted from the active layer **18**. Mounting substrate **14** is an aluminum nitride (AlN) substrate or a metal core printed circuit board (MCPCB).

[0022] In the flip-chip orientation of LED die **11**, converter plate **12** is disposed above sapphire substrate **16**. A very thin bonding layer **23** of metal oxide disposed over sapphire substrate **16** is used to attach converter plate **12** to LED die **11**. Bonding layer **23** is less than one micron thick. In one embodiment, bonding layer **23** is a metal oxide such as magnesium oxide (MgO) and has a thickness of 0.1 microns. In comparison, converter plate **12** is between 60 and 100 microns thick. A second bonding layer **24** of metal oxide is used to bond chip-level lens **13** to the upper surface of converter plate **12**. Bonding layer **24** is also less than one micron thick. In other embodiments, bonding layers **23-24** can be made of chromium oxide, nickel oxide, indium tin oxide or tungsten oxide. In one embodiment, lens **13** is made of glass.

[0023] Converter plate **12** is made by sintering glass powder mixed with particles **25** of phosphor, such as cerium-doped yttrium aluminum garnet (Ce:YAG). The phosphor particles **25** in the resulting phosphor-glass are dispersed homogeneously. No phosphor is embedded in the hemispherical glass lens **13** because the greater amount of phosphor in the middle of the lens compared to the thinner edges of the lens would result in color-over-angle anomalies in which the emitted light is bluer at some angles and yellower at other angles. LED light source **10** is particularly suited to automotive applications that involve high operating temperatures because the items attached above the LED die **11** are composed entirely of inorganic materials. The bonding layers are made of metal oxides, and the converter plate **12** and lens **13** are made of glass or ceramic. Even under extended periods of high operating temperatures, the structural integrity of the components of the LED light source **10** does not deteriorate because there are no organic resins that can deform under the high temperatures, such as methyl-based or phenol-based silicones. The phosphor particles are stably held in the glass even under extreme vibration at high temperatures and high humidity over the long operating life of a vehicle. The operating conditions experienced by the headlights of a vehicle are particularly damaging to a light source that includes phosphor particles embedded in an organic matrix such as silicone or epoxy because the matrix is shaken at the same time that the matrix is subjected to extreme heat, which hastens the breakdown of the organic matrix and the performance of the phosphor. In one embodiment, the glass of the converter plate **12** is borosilicate glass SiO_2—B_2O_3—Mg, which has a refractive index of about 1.46.

[0024] When a drive current passes through the N-electrode **21** and the P-electrode, the gallium-nitride LED junction of LED die **11** emits blue light with a wavelength of about 452 nanometers. The blue light that is emitted down-

wards and towards to the sides of LED die **11** is reflected and travels up through converter plate **12** together with the blue light that is directly emitted upwards. The phosphor dispersed in converter plate **2** converts a portion of the blue light generated by the LED junction into light in the yellow region of the optical spectrum. The combination of the blue and yellow light is perceived as "white" light by a human observer.

[0025] In another embodiment, two types of phosphors are embedded in converter plate **2**. The first type of phosphor particles **25** converts the blue light into a longer reddish light, while the second type of phosphor particles **25** converts the blue light into a relatively shorter yellowish light. For example, the first type of phosphor is a mixture of YAG and a nitride phosphor, while the second type of phosphor is just YAG. The mixture of reddish, yellowish and bluish light produces a whiter light than just a mixture of yellow and blue, which can be perceived as a bluish headlight beam.

[0026] The design and materials of LED light source **10** increase the radiant flux of light emitted by the light source. The materials for the LED light source **10** above the flip-chip mounted LED die **11** are chosen to have indices of refraction that are relatively similar to that of sapphire substrate **16** in order to reduce the amount of light that is reflected back down as the blue light exits the LED die **11** upwards and passes through the different materials of the bonding layers **23-24**, converter plate **12** and lens **13**. For blue light with a wavelength of about 450 nanometers, sapphire has a refractive index of about 1.78. The bonding layers **23-24** of metal oxide have a refractive index of about 1.45. The borosilicate glass of converter plate **12** and lens **13** has a refractive index of about 1.46. The yellow light emitted from the phosphor particles **25** in converter plate **12** is also not reflected as it passes through the boundaries between different mediums because the refractive indices of converter plate **12**, bonding layer **24** and glass lens **13** are all about the same.

[0027] The luminous intensity of LED light source **10** is also increased by mounting the chip-level lens **13** above each individual LED die. For the automotive application of a vehicle headlight, the intensity of the headlight beam is the critical factor. Adding a hemispherical lens that does not contain phosphor above the phosphor glass **12** increases the luminous intensity of the headlight beam in lumens per steradian (lm/sr=candela) by at least 7% compared to having no lens mounted to converter plate **12**.

[0028] The luminous flux emitted by a light source with a single typical LED die is too small to generate a sufficiently bright headlight beam for a vehicle. For example, LED light source **10** with a single LED die **11** generates a luminous flux of about 300 lumens. In one embodiment, a luminous flux of at least 1800 lumens is desired for the high beam of a vehicle headlight. Thus, six LED light sources **10** are placed in a linear array to generate the desired 1800 lumens. By focusing the light emitted from the six light sources in a beamwidth of 35 degrees (equivalent to a solid angle of 65 steradians), the 1800 lumens result in a luminous intensity of over six thousand candella. By individually focusing the light emitted from the six LED light sources using six chip-level lenses **13**, a headlight beam with a higher luminous intensity can be generated than by using only a single larger lens to focus the light from the linear array of six light sources. For example, the light emitted from the six LED light sources can be directed towards a larger reflective lens. Thus, the performance of the headlight light source is increased by more than seven percent by mounting a chip-level lens on top of the converter plate of phosphor glass attached to each LED die. In other embodiments, a different number of LED light sources **10** are placed in a linear array based on the luminous flux output by each LED die and the total luminous intensity desired for the headlight beam.

[0029] FIG. **2** shows a cross-sectional view of a lighting system **26** that includes a linear array of four light sources **27-30** of the type shown in FIG. **1**. The LED dies **11** of the light sources **27-30** are bonded to traces **22** on mounting substrate **14**. The traces **22** are patterned from a metal layer that is deposited on an insulating layer over the substrate. A reflective material **31** is injected between and around the light sources **27-30**. Reflective material **31** includes light reflecting particles **32** dispersed in a transparent carrier material that scatter light striking the particles. In one embodiment, the particles **32** are spheres of titanium dioxide (TiO_2). The scattering particles **32** have diameters that are greater than the wavelength of the light generated by the LED dies **11**, which is about 452 nm. Reflective material **31** reflects the blue light from the LED dies **11** that exits the sides of the light sources **27-30**. Most of the blue light that is emitted out the sides of the LED dies **11** is reflected back into the light sources **27-30** and up through converter plate **12**. The blue light that is reflected back through converter plate **12** is either converted to longer wavelength yellowish light by phosphor particles **25** or passes up through converter plate **12** as blue light. If the thickness of the reflective material **31** on the sides of the light sources **27-30** is at least one hundred microns, then more than 99% of the light exiting the sides of the light sources **27-30** will be reflected back towards the light sources **27-30**. The reflectivity decreases as the thickness of the reflective material **31** covering the sides of the light sources **27-30** decreases. For example, about 97% of the light exiting the sides of the light sources **27-30** is reflected back when the thickness of the reflective material **31** is about fifty microns.

[0030] In the automotive application of lighting system **26** that uses light sources **27-30** in a vehicle headlight, it is desirable to place the LED dies of the linear array as close as possible to one another so that the emitted light will not be perceived as coming from multiple individual light sources. The light source of the headlight is to be perceived as a single bar of light. However, the spacing between the light sources **27-30** should be at least fifty microns so that at least 97% of the light exiting the sides of the light sources **27-30** is reflected back by material **31** and exits out the top of the light sources through the converter plates **12**. The optimum spacing between the LED light sources **27-30** is 50-100 microns.

[0031] FIG. **3** shows the undesired overlap of lenses **13** on adjacent light sources that are spaced less than fifty microns apart if the portions of the lenses that extend horizontally beyond the lateral boundaries of the converter plates **12** are not cut off. If approximately hemispherical lenses are placed over the converter plates **12**, the edges of the lenses on adjacent light sources will overlap if the light sources are spaced fifty microns apart and if each lens is sized to cover the entire top surface of the converter plate. Therefore, the portions of each lens **13** that extend outside the lateral boundary of the converter plate **12** are truncated. Simply mounting a smaller hemispherical lens over the converter plate **12** would be a suboptimal solution to the overlap problem because the corners of the converter plate would

not be covered by the lens, and the light exiting from the corners of the converter plate would not be focused by the lens.

[0032] FIG. **4** shows LED light source **10** viewed from a corner such that two adjacent sides of the light source are visible. The vertical surfaces **33** of the chip-level lens **13** are apparent where the portions of the lens that extended beyond the lateral boundary of the converter plate **12** were cut off. The front views of the surfaces **33** are not shown in FIGS. **1-2**.

[0033] FIG. **5** is a perspective view of lighting system **26** of FIG. **2** showing four truncated chip-level lenses **13** mounted on the converter plates **12** of the four light sources **27-30**. The relative heights of the LED dies **11**, the converter plates **12** and the lenses **13** are not shown to scale in FIG. **2**. FIG. **5** is a more accurate representation of the relative dimensions of the dies **11**, plates **12** and lenses **13**. The dies **11** and plates **12** are much thinner than shown in FIG. **2** compared to the size of the lenses **13**.

[0034] FIG. **6** is a perspective view of the lighting system **26** of FIG. **5** mounted in an LED headlight bulb unit **34** of a motor vehicle. The LED light sources **27-30** of lighting system **26** are particularly suited to automotive lighting applications because the entirely inorganic materials of the converter plate **12**, chip-level lens **13** and bonding layers **23-24** do not break down under extended periods of extreme vibration at high operating temperatures as do lighting systems that contain silicone or epoxy resins.

[0035] FIG. **7** is a cross-sectional view of another embodiment of an LED light source **35** in which a lateral LED die **36** is vertically mounted to mounting substrate **14**. LED die **36** has a P-electrode **37** electrically coupled to ITO layer **20**. P-electrode **37** and n-electrode **21** are non-transparent metal layers. P-electrode **37** and N-electrode **21** are electrically coupled to the conductive traces **22** by bond wires **38**. During operation of lateral LED die **36**, a voltage is placed across P-electrode **37** and N-electrode **21** causing a current to flow from P-electrode **37** to N-electrode **21** and thereby causing blue light to be generated in active layer **18**. In the lateral LED embodiment of FIG. **7**, blue light can pass directly from the multi-layer epitaxial structure of gallium nitride layers **17-19** into the phosphor glass of converter plate **12** without passing through sapphire substrate **16**.

[0036] The vertical LED embodiment of FIG. **1** has at least three advantages over the lateral LED embodiment of FIG. **7**. First, there is more reflection of blue light back towards LED die **36** as the light passes up through the first bonding layer **23** because the difference between the refractive indices of gallium nitride (2.48) and metal oxide bonding layer **23** (1.45) is greater than the difference between the refractive indices of sapphire substrate **16** (1.78) and bonding layer **23** (1.45). Second, converter plate **12** cannot extend over the locations at which the bond wires **38** contact P-electrode **37** and N-electrode **21**. Thus, some blue light that is emitted around the electrodes passes up an out of LED die **36** without passing through converter plate **12** and without the possibility of being converted to longer wavelength yellowish light. Moreover, P-electrode **37** and n-electrode **21** are non-transparent metal layers through which the emitted blue light cannot pass. Third, the bond wires complicate the assembly of the linear array of light sources **35**. The reflective material **31** must be injected around the bond wires **38** between the light sources **35**. And the light sources cannot have the desired optimum spacing of no more than one hundred microns between light sources on the sides of the light sources to which the bond wires are attached. The flip-chip orientation of LED die **11** of the embodiment of FIG. **1** solves these three issues. In yet another embodiment, a non-linear array of LED light sources forms the lighting system **26**. Each side of the non-linear array has at least two LED dies. Achieving the optimum tight spacing of light sources in a non-linear array that is desired for a vehicle headlight application is even more difficult with lateral LED dies that must be electrically connected using bond wires.

[0037] FIG. **8** shows a cross-sectional view of another embodiment of a lighting system **39** that includes a linear array of multiple light sources. The LED light sources of lighting system **39** are similar to the light sources **27-30** of lighting system **26** of FIG. **2** except that the light sources of FIG. **8** share a common, unitary converter plate **40** of phosphor glass. The larger unitary converter plate **40** reduces the amount of blue light that can exit upwards out of the light sources without passing through a converter plate containing phosphor. Thus, the bar of phosphor glass **40** covering all four light sources improves the uniformity of the emitted light and further precludes lighting system **39** from being perceived as four separate light sources. In addition, the manufacture and mounting of the unitary converter plate **40** is less complicated than making and mounting individual smaller converter plates.

[0038] FIG. **9** shows a cross-sectional view of yet another embodiment of a lighting system **41** that includes a linear array of multiple light sources. The LED light sources of lighting system **41** are similar to the light sources **27-30** of lighting system **26** of FIG. **2** except that the light sources of FIG. **9** share a common converter plate **40** as well as a common, unitary lens array **42**. The second bonding layer **24** of metal oxide covers the entire upper surface of common converter plate **40** and bonds lens array **42** to plate **40**. The common lens array **42** includes separate curved lens portions **43-46** centered over each of the four LED dies **11**. The edges of individual lenses need not be truncated between the LED dies in order to achieve the desired tight spacing between the light sources. The curved lens portions **43-46** are formed on unitary lens array **42** at locations that accommodate a spacing between the LED dies **11** of 50-100 microns.

[0039] Although certain specific embodiments are described above for instructional purposes, the teachings of this patent document have general applicability and are not limited to the specific embodiments described above. Accordingly, various modifications, adaptations, and combinations of various features of the described embodiments can be practiced without departing from the scope of the invention as set forth in the claims.

1-20. (canceled)

21. A device comprising:

a substrate;

a first LED die mounted on the substrate;

a first converter plate disposed above the first LED die, wherein the first converter plate includes phosphor particles embedded in glass;

a first lens, wherein the first converter plate is disposed between the first LED die and the first lens, and wherein the first lens does not extend outside any lateral boundary of the first converter plate;

a second LED die mounted on the substrate, wherein the first LED die is spaced apart from the second LED die by no more than one hundred microns;

a second converter plate disposed above the second LED die; and

a second lens, wherein the second converter plate is disposed between the second LED die and the second lens, and wherein the second lens does not extend outside any lateral boundary of the second converter plate.

22. The device of claim **21**, further comprising:

a reflective material that includes light scattering particles dispersed in a transparent carrier, wherein the reflective material is disposed between the first LED die and the second LED die.

23. The device of claim **22**, wherein the transparent carrier is silicone.

24. The device of claim **22**, wherein the light scattering particles are spheres of titanium dioxide.

25. The device of claim **21**, wherein no organic material is included in any of the first converter plate, the first lens, the second converter plate or the second lens.

26. The device of claim **21**, wherein the first LED die is spaced apart from the second LED die by at least fifty microns.

27. The device of claim **21**, wherein the first LED die is flip-chip mounted onto the substrate.

28. The device of claim **21**, wherein the device is part of a headlight bulb unit of a motor vehicle.

29. The device of claim **21**, further comprising:

a third LED die, wherein the first LED die, the second LED die and the third LED die are included in a non-linear array of LED light sources.

30. A device comprising:

an LED die;

a substrate, wherein the LED die is mounted on the substrate;

a converter plate, wherein the LED die is disposed between the substrate and the converter plate, and wherein the converter plate includes phosphor particles embedded in glass or ceramic; and

a lens, wherein the converter plate is disposed between the LED die and the lens, wherein the device includes no organic materials.

31. The device of claim **30**, wherein the lens is shaped approximately as a hemisphere in which portions of the hemisphere that extend outside the lateral boundaries of the converter plate are truncated.

32. The device of claim **30**, wherein the lens does not extend horizontally beyond the lateral boundary of the converter plate.

33. The device of claim **30**, wherein the LED die is flip-chip mounted on the substrate.

34. The device of claim **30**, wherein the device is part of a vehicle headlight module.

35. A device comprising:

a substrate;

an LED die mounted on the substrate;

a converter plate, wherein the LED die is disposed between the substrate and the converter plate, and wherein the converter plate includes phosphor particles embedded in glass or ceramic;

a bonding layer disposed between the LED die and the converter plate, wherein the bonding layer is made of a metal oxide; and

a lens, wherein the converter plate is disposed between the LED die and the lens, and wherein the lens does not extend outside a lateral boundary of the converter plate.

36. The device of claim **35**, wherein the bonding layer has a thickness of less than one micron.

37. The device of claim **35**, wherein the bonding layer is made of a metal oxide selected from the group consisting of: magnesium oxide, chromium oxide, nickel oxide, indium tin oxide and tungsten oxide.

38. The device of claim **35**, wherein the lens is made of borosilicate glass.

39. The device of claim **35**, wherein the device includes no organic materials.

40. The device of claim **35**, wherein the device is part of a headlight bulb unit of a motor vehicle.

* * * * *