US010381333B2

(12) **United States Patent**
Zhang et al.

(10) **Patent No.: US 10,381,333 B2**
(45) **Date of Patent: *Aug. 13, 2019**

(54) **METHODS OF MAKING LIGHT-EMITTING ASSEMBLIES COMPRISING AN ARRAY OF LIGHT-EMITTING DIODES HAVING AN OPTIMIZED LENS CONFIGURATION**

(71) Applicant: **Bridgelux, Inc.**, Livermore, CA (US)

(72) Inventors: **Wenhui Zhang**, Pleasanton, CA (US); **Tao Tong**, Pleasanton, CA (US); **Zhengqing Gan**, Clayton, CA (US)

(73) Assignee: **Bridgelux, Inc.**, Livermore, CA (US)

(*) Notice: Subject to any disclaimer, the term of this patent is extended or adjusted under 35 U.S.C. 154(b) by 0 days.

This patent is subject to a terminal disclaimer.

(21) Appl. No.: **16/019,443**

(22) Filed: **Jun. 26, 2018**

(65) **Prior Publication Data**

US 2018/0374830 A1 Dec. 27, 2018

Related U.S. Application Data

(60) Continuation of application No. 15/075,027, filed on Mar. 18, 2016, now Pat. No. 10,008,482, which is a
(Continued)

(51) **Int. Cl.**
H01L 33/58 (2010.01)
H01L 25/075 (2006.01)
(Continued)

(52) **U.S. Cl.**
CPC ***H01L 25/0753*** (2013.01); ***H01L 33/507*** (2013.01); ***H01L 33/54*** (2013.01);
(Continued)

(58) **Field of Classification Search**
CPC H01L 25/0753; H01L 33/54; H01L 33/56; H01L 33/60; H01L 33/62; H01L 33/507
See application file for complete search history.

(56) **References Cited**

U.S. PATENT DOCUMENTS

6,155,699 A 12/2000 Miller et al.
8,330,176 B2 12/2012 Thompson et al.
(Continued)

OTHER PUBLICATIONS

Non-Final Office Action dated Jun. 29, 2015 in corresponding U.S. Appl. No. 14/046,903, filed Oct. 4, 2013; total 9 pages.
(Continued)

Primary Examiner — Ali Alavi
(74) *Attorney, Agent, or Firm* — Snell & Wilmer L.L.P.

(57) **ABSTRACT**

Light emitting assemblies comprise a plurality of Light Emitting Diode (LED) dies arranged and attached to common substrate to form an LED array having a desired optimum packing density. The LED dies are wired to one another and are attached to landing pads on the substrate for receiving power from an external electrical source via an interconnect device. The assembly comprises a lens structure, wherein each LED die comprises an optical lens disposed thereover that is configured to promote optimal light transmission. Each optical lens has a diameter that is between about 1.5 to 3 times the size of a respective LED die, and is shaped in the form of a hemisphere. Fillet segments are integral with and interposed between the adjacent optical lenses, and provide sufficient space between adjacent optical lenses so that the diameters of adjacent optical lenses do not intersect with one another.

20 Claims, 8 Drawing Sheets

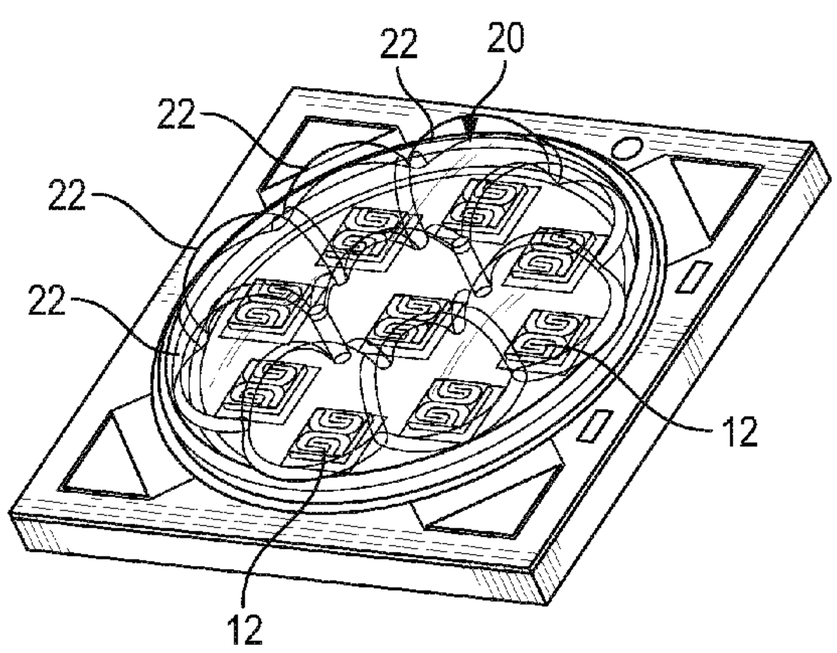

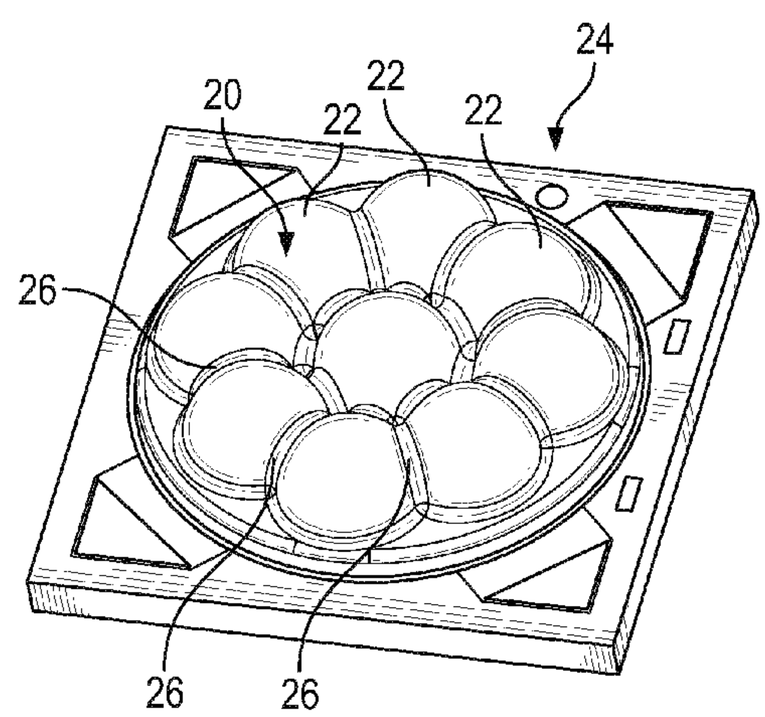

Related U.S. Application Data

division of application No. 14/046,903, filed on Oct. 4, 2013, now Pat. No. 9,299,687.

(60) Provisional application No. 61/710,629, filed on Oct. 5, 2012.

(51) **Int. Cl.**

H01L 33/50	(2010.01)
H01L 33/54	(2010.01)
H01L 33/56	(2010.01)
H01L 33/60	(2010.01)
H01L 33/62	(2010.01)

(52) **U.S. Cl.**

CPC ***H01L 33/56*** (2013.01); ***H01L 33/60*** (2013.01); ***H01L 33/62*** (2013.01); *H01L 33/58* (2013.01); *H01L 2924/0002* (2013.01); *H01L 2933/005* (2013.01); *H01L 2933/0041* (2013.01); *H01L 2933/0058* (2013.01); *H01L 2933/0066* (2013.01)

(56) **References Cited**

U.S. PATENT DOCUMENTS

8,399,268	B1	3/2013	Mei et al.	
8,759,123	B2	6/2014	Wada et al.	
8,779,694	B1	7/2014	Lindblad et al.	
8,900,892	B2 *	12/2014	Mei	H01L 33/50 257/E21.032
9,024,341	B2	5/2015	Lee et al.	
9,234,801	B2	1/2016	Mei et al.	
2005/0045903	A1 *	3/2005	Abe	H01L 21/568 257/100
2006/0138436	A1 *	6/2006	Chen	H01L 33/486 257/98
2008/0203415	A1 *	8/2008	Thompson	B29C 33/0022 257/98
2010/0213484	A1	8/2010	Lin	
2011/0037091	A1	2/2011	Fushimi	
2011/0058372	A1	3/2011	Lerman et al.	
2012/0104435	A1	5/2012	Lee et al.	

OTHER PUBLICATIONS

Notice of Allowance dated Nov. 20, 2015 in corresponding U.S. Appl. No. 14/046,903, filed Oct. 4, 2013; total 7 pages.

Non-Final Office Action dated Oct. 13, 2017 in corresponding U.S. Appl. No. 15/075,027, filed Mar. 18, 2016; total 12 pages.

Notice of Allowance dated Feb. 28, 2018 in corresponding U.S. Appl. No. 15/075,027, filed Mar. 18, 2016; total 7 pages.

* cited by examiner

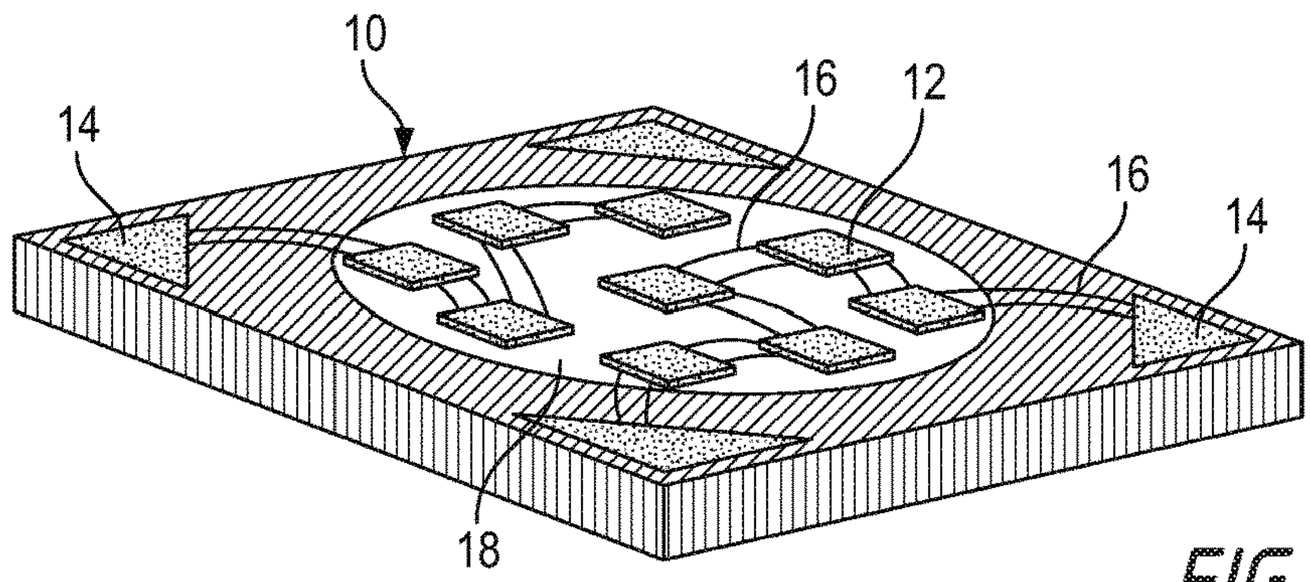

FIG. 1

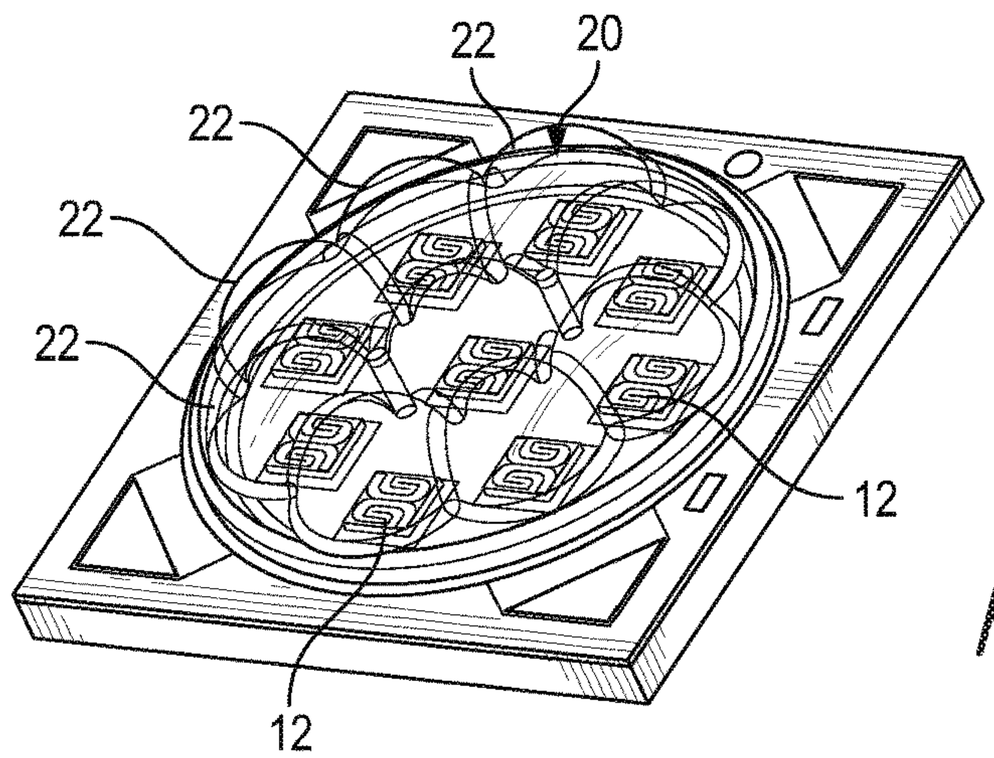

FIG. 2A

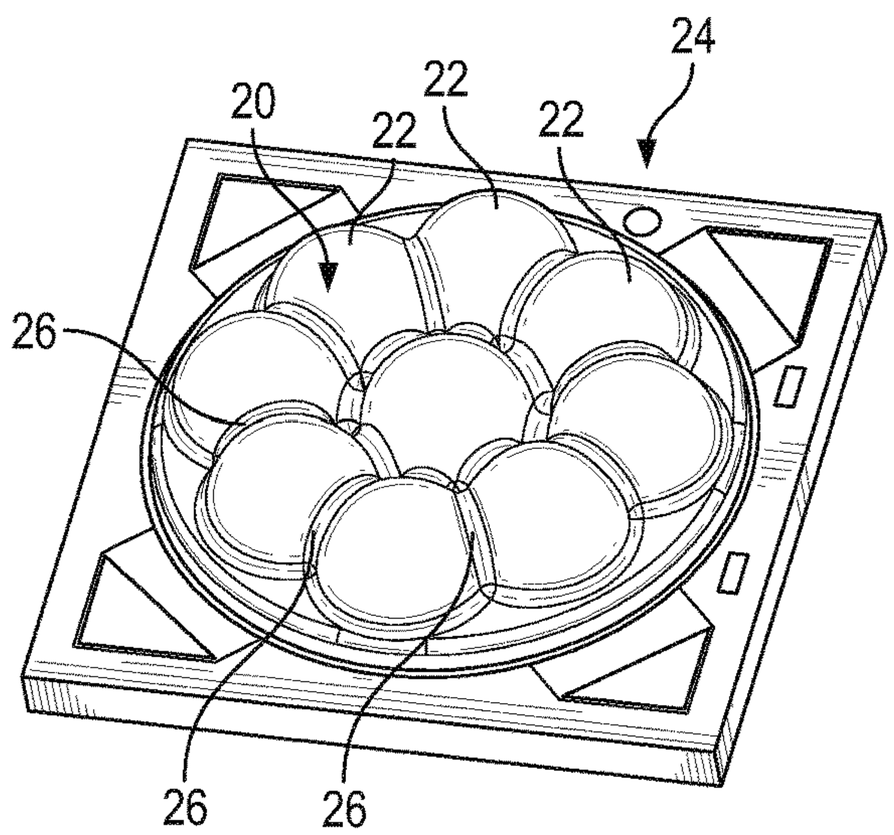

FIG. 2B

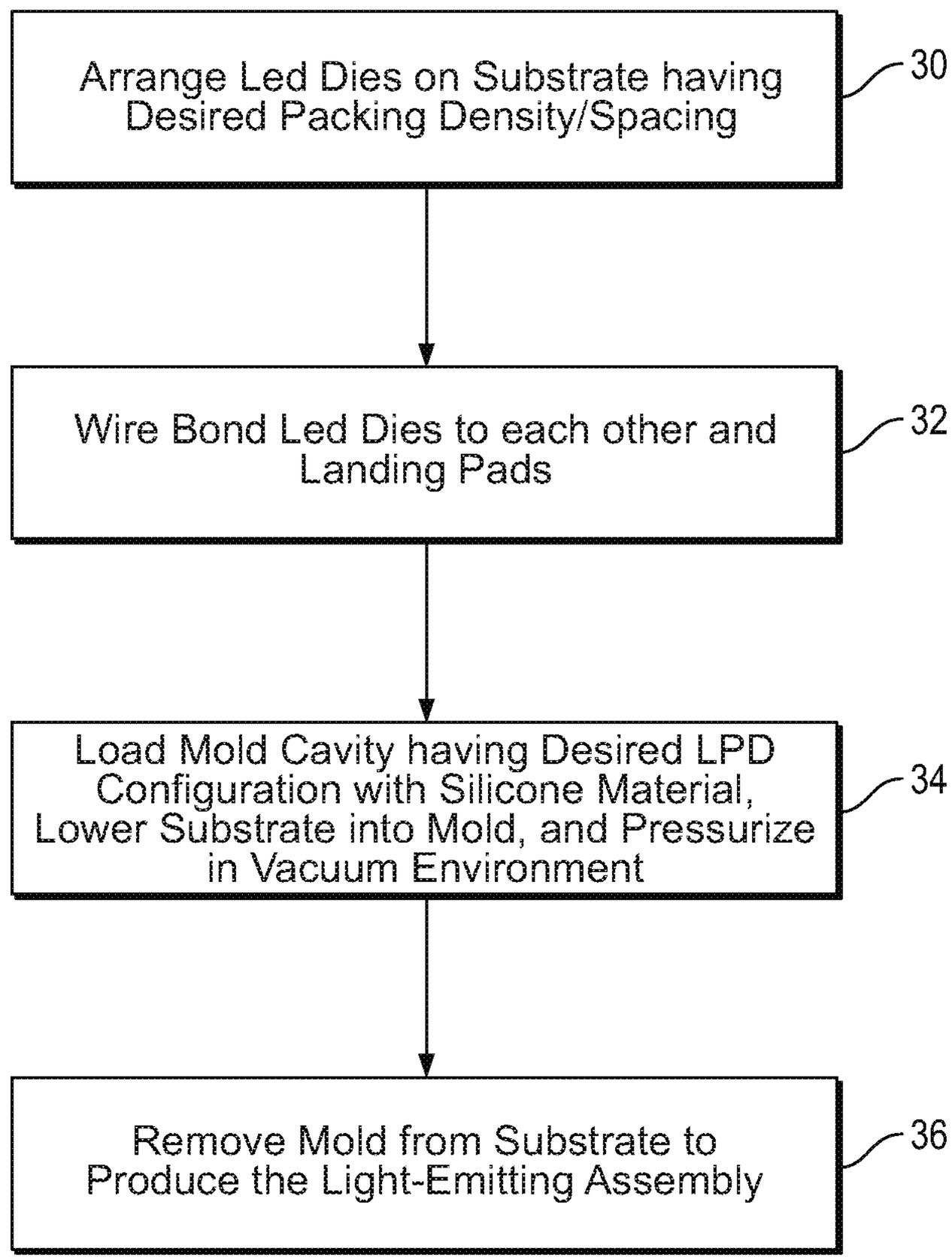
Arrange Led Dies on Substrate having Desired Packing Density/Spacing
30
Wire Bond Led Dies to each other and Landing Pads
32
Load Mold Cavity having Desired LPD Configuration with Silicone Material, Lower Substrate into Mold, and Pressurize in Vacuum Environment
34
Remove Mold from Substrate to Produce the Light-Emitting Assembly
36

FIG. 3

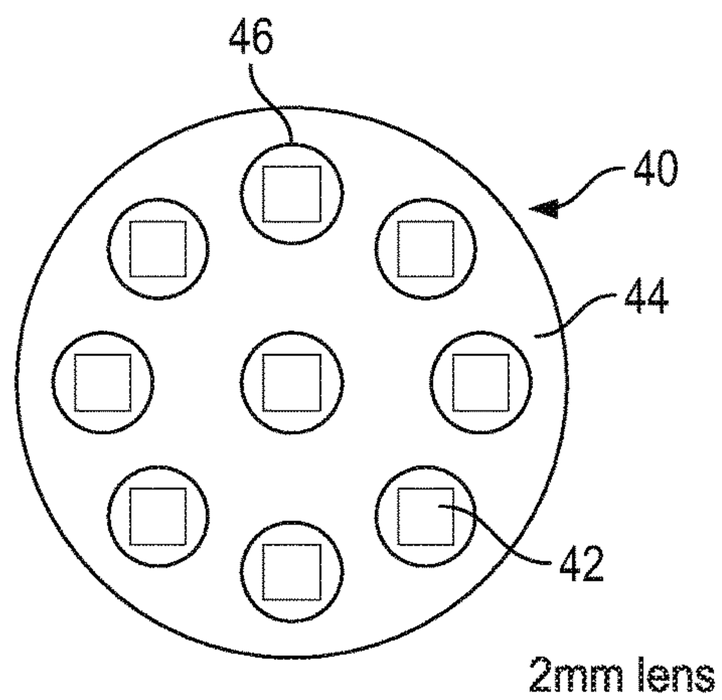

FIG. 4A

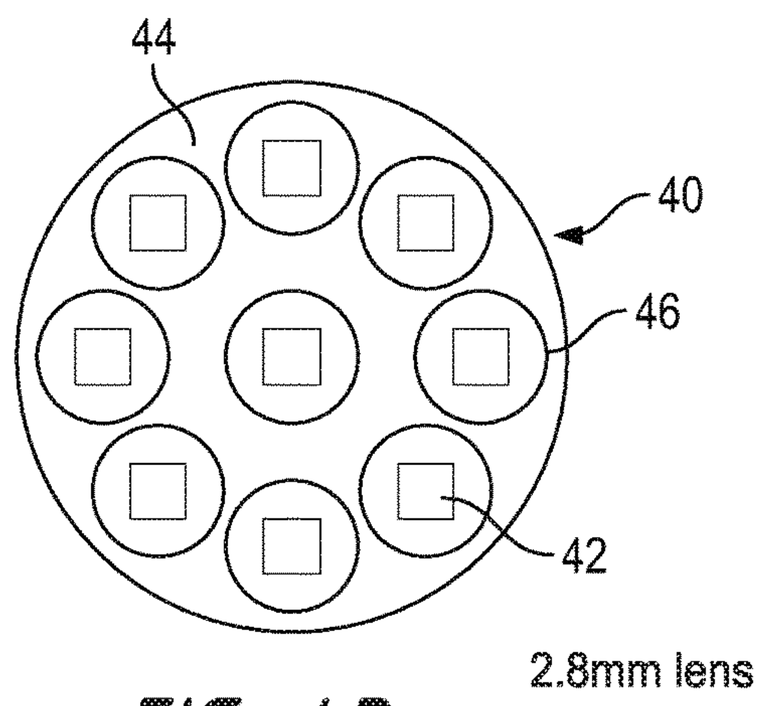

FIG. 4B

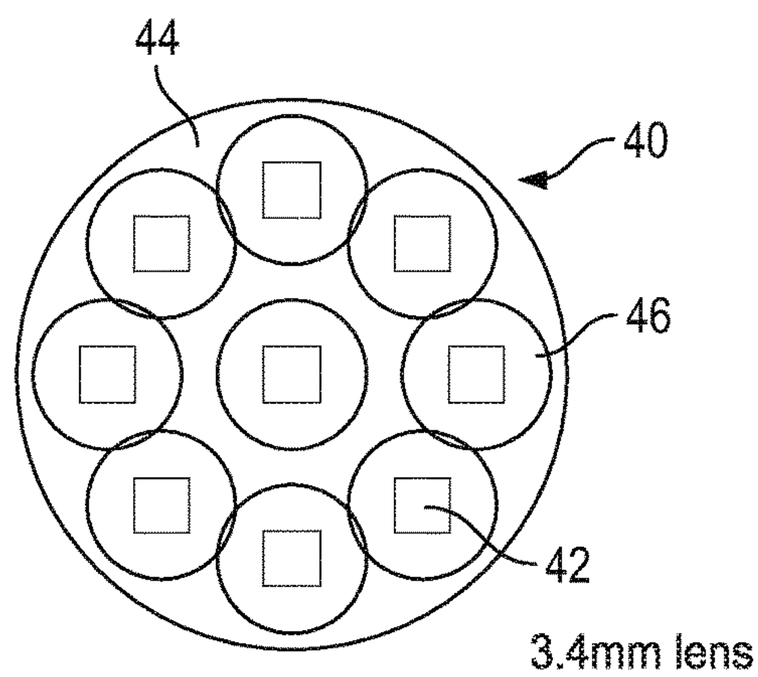

FIG. 4C

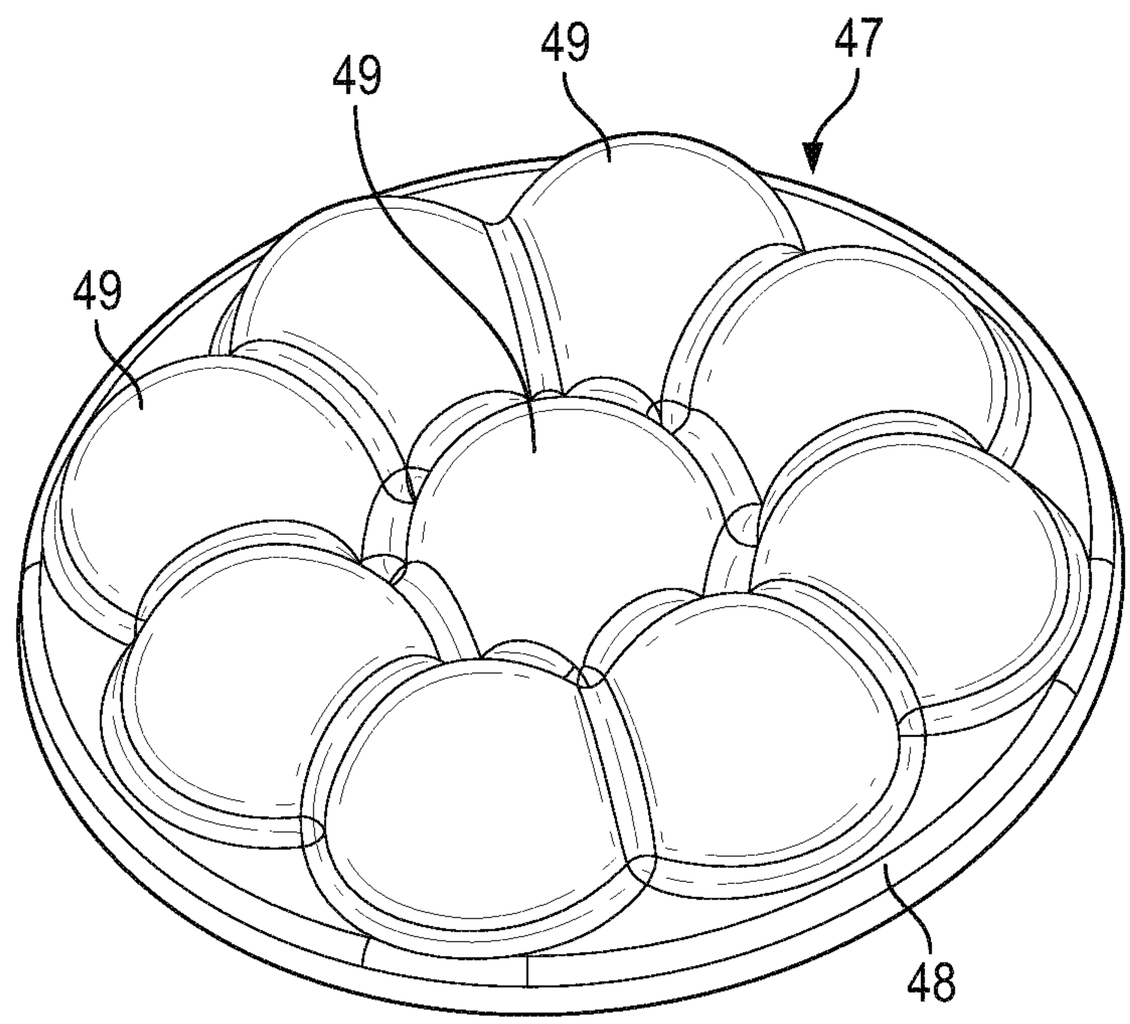

FIG. 5

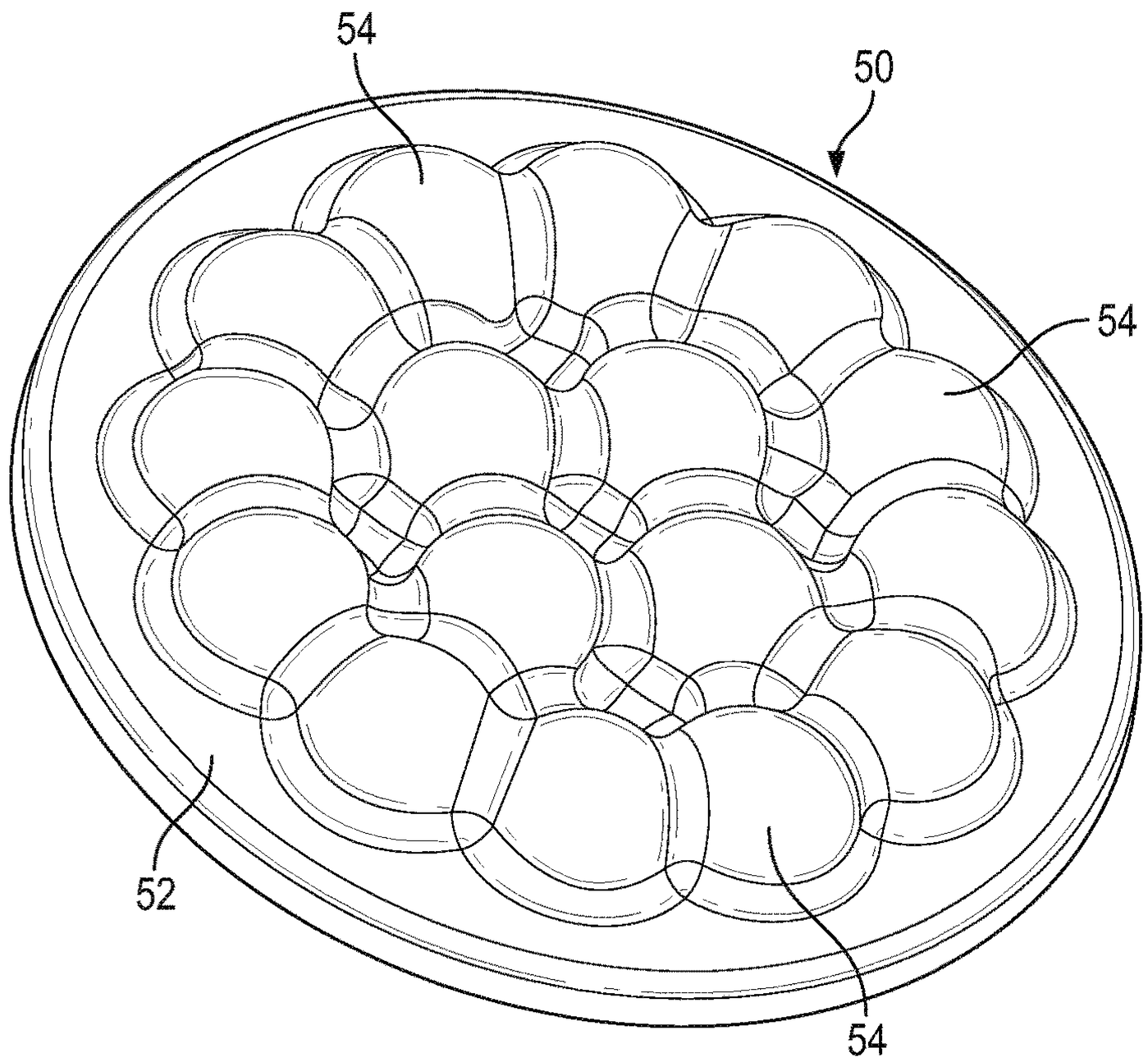

FIG. 6

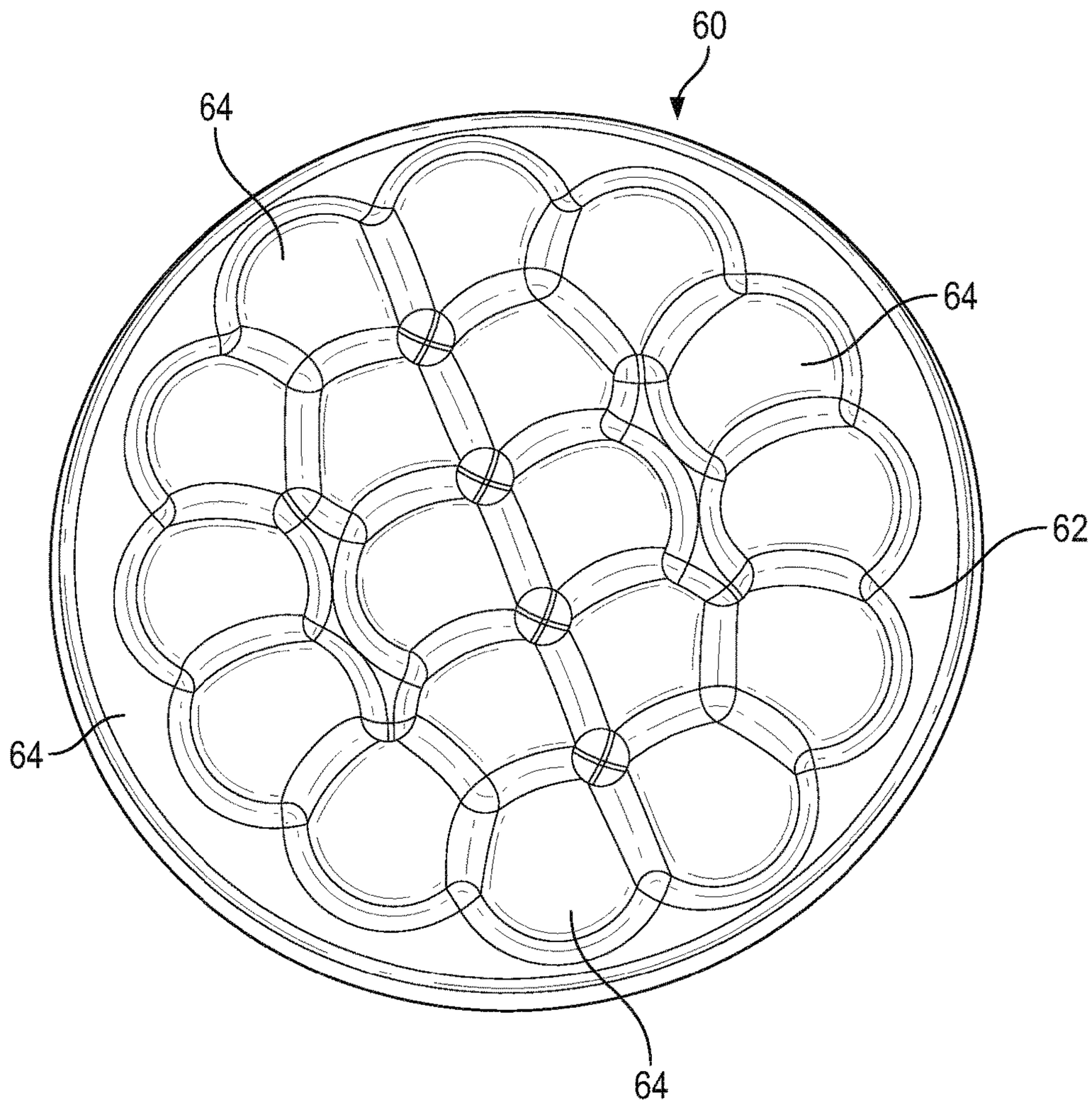

FIG. 7

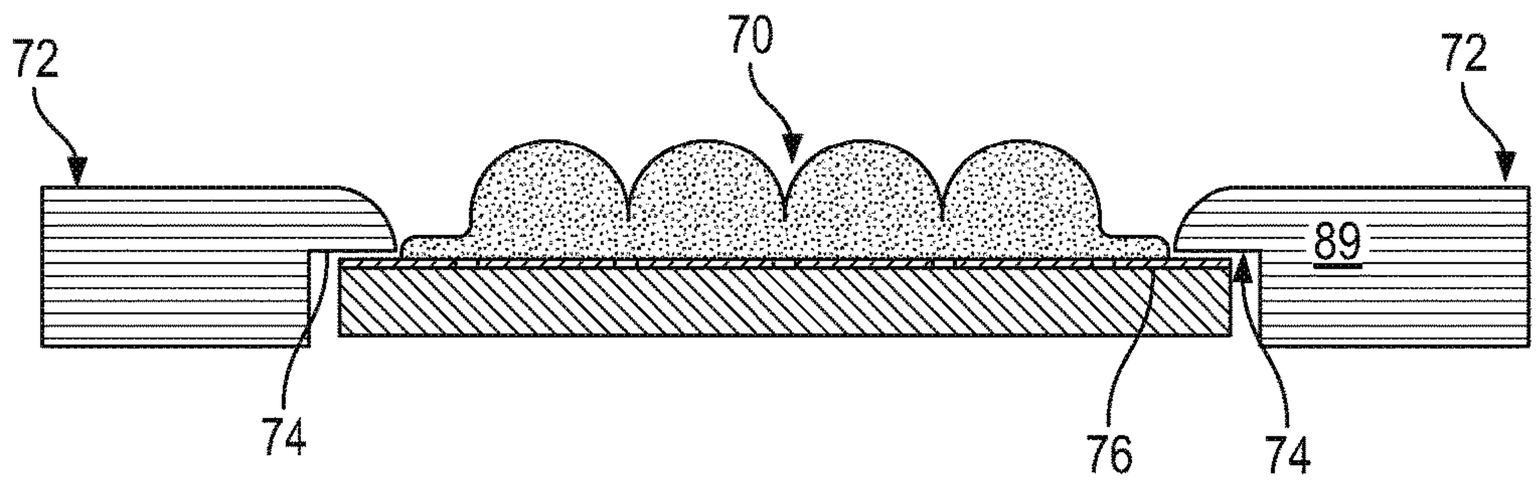

FIG. 8

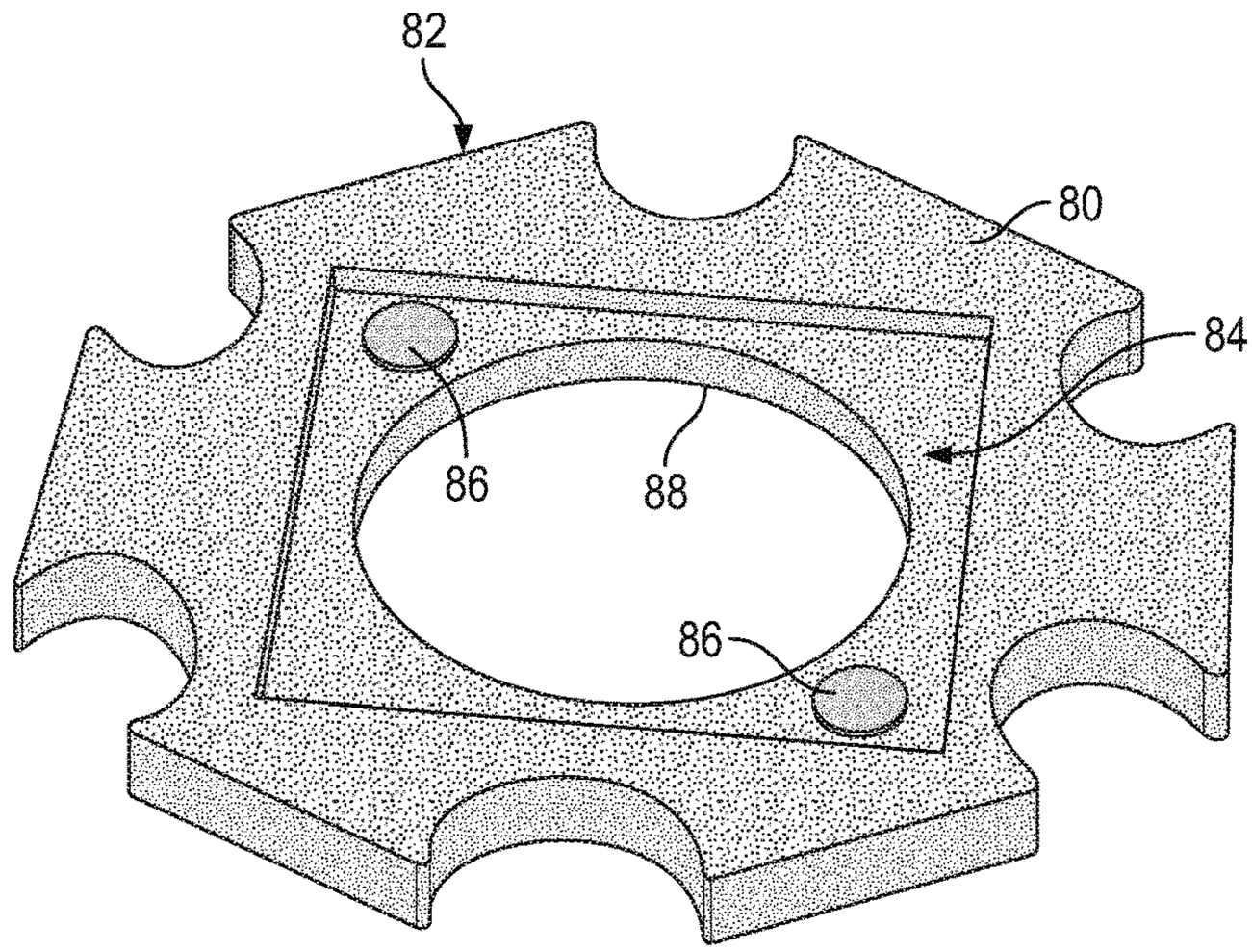

FIG. 9

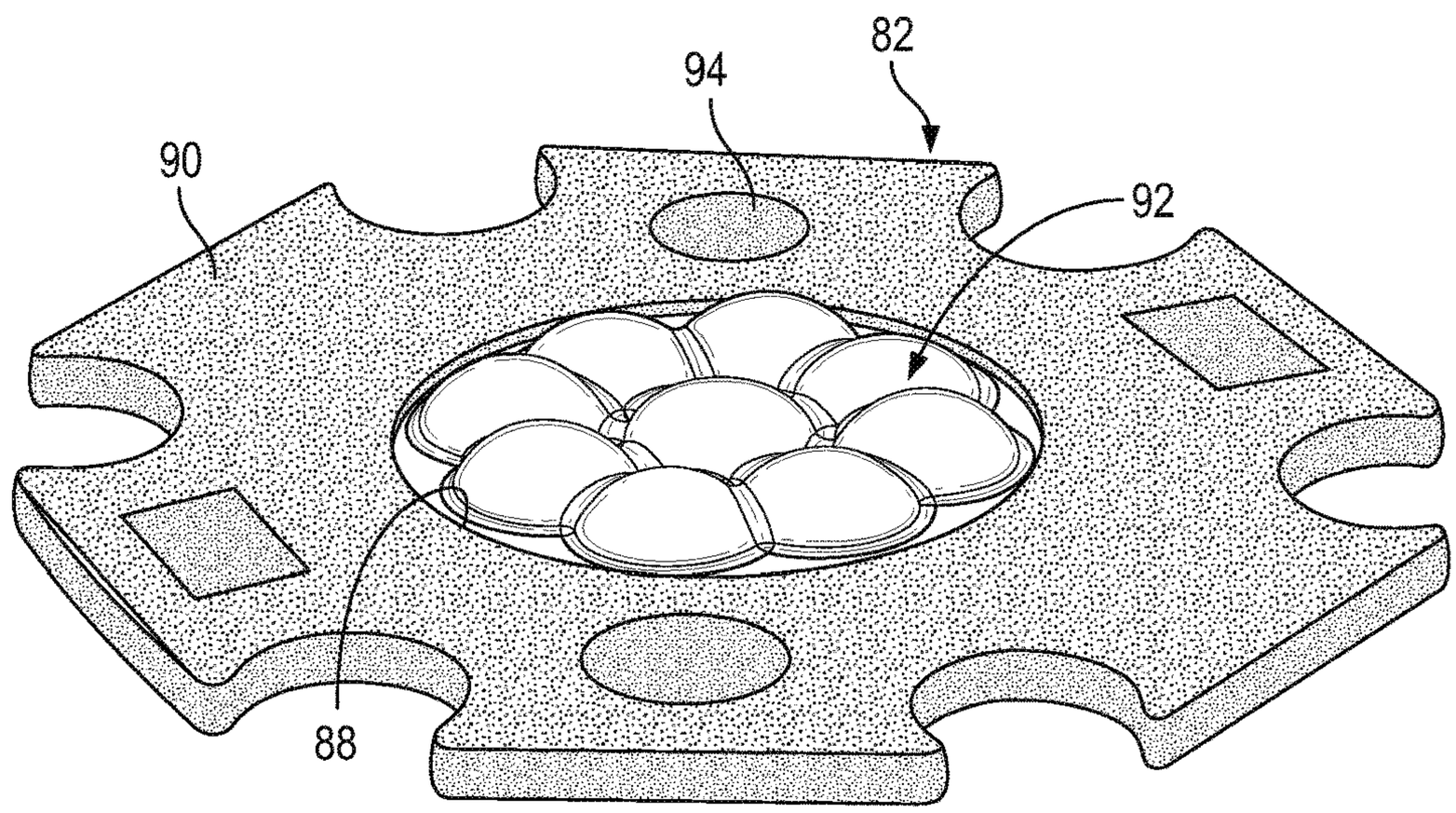

FIG. 10

METHODS OF MAKING LIGHT-EMITTING ASSEMBLIES COMPRISING AN ARRAY OF LIGHT-EMITTING DIODES HAVING AN OPTIMIZED LENS CONFIGURATION

CROSS-REFERENCE TO A RELATED APPLICATION

The present Application for patent is a continuation of U.S. patent application Ser. No. 15/075,027, filed on Mar. 18, 2016, now patent Ser. No. 10/008,482, issued Jun. 26, 2018, which is a divisional of U.S. patent application Ser. No. 14/046,903, filed on Oct. 4, 2013, now U.S. Pat. No. 9,299,687, issued Mar. 29, 2016, which claims priority to U.S. Provisional Application No. 61/710,629, filed on Oct. 5, 2012, entitled "LIGHT-EMITTING ASSEMBLIES COMPRISING AN ARRAY OF LIGHT-EMITTING DIODES HAVING AN OPTIMIZED LENS CONFIGURATION," which applications are herein incorporated by reference in their entireties.

TECHNICAL FIELD

The present invention relates generally to light-emitting assemblies comprising a plurality of light-emitting diodes and, more specifically, to an array of light-emitting diodes that have been specifically arranged and that have lenses configured to provide optimal space utilization, packaging and light transmission.

BACKGROUND

A light emitting diode (LED) is a solid state device that converts electrical energy to light. Light is emitted from active layers of semiconductor material sandwiched between oppositely doped layers when a voltage is applied across the doped layers. In order to use an LED chip, the chip is typically enclosed in a package that focuses the light and that protects the chip from being damaged. The LED package typically includes contact points for electrically connecting the LED package to an external circuit or power source. Conventionally, LED chips are designed to be packaged either as a discrete light emitter or with a group of LED chips, e.g., in an array, to provide a light-emitting assembly.

Light-emitting assemblies comprising an array of LEDs include a number of LED dies that have been arranged in some predetermined fashion. It is known for conventional LED arrays to make use of one or more lenses for the purpose of both protecting the underling LED dies from being physically damaged, e.g., from contact with an external object, and for facilitating the emission of light from LEDs.

Existing lenses known in the art used with LED arrays are provided in the form of a pre-formed dome-shaped member that is sized and shaped to fit over a number of LED dies, and operate to provide a focused light emission. The lens is formed from glass or plastic, and includes attachment elements for providing a secure fit with a substrate. The lens can include a phosphor layer provided along a bottom surface adjacent the LED dies to provide a desired color light, e.g., white light.

Other light-emitting assemblies known in the art comprises lenses that are not provided as a pre-formed element, but that are provided in the form of a lens-forming material that is disposed over the LED dies, and that is shaped into a desired end-use configuration by cast molding, injection molding, or compression molding technique. In such conventional embodiments, the lens material is provided over an existing transparent protective layer disposed over the LED dies.

While light-emitting assemblies, comprising an array of LEDs, making use of LED dies and the above-noted lens constructions are somewhat useful in facilitating the emission of light from an array of LEDs, such light-emitting assemblies are limited in terms of their ability to provide an LED array having optimized packaging and lens construction to facilitate a light-emitting assembly construction capable of providing an optimized light output/transmission in a relatively small spatial package, thereby limiting potential end-use applications.

It is, therefore, desired that light-emitting assemblies, comprising an LED array formed from a plurality of LED dies, be developed in a manner having an optimized LED die spatial arrangement/packing density together with an optimized lens construction to provide an desired efficiently-packaged assembly having a high-light output/transmission when compared to conventional LED light-emitting assemblies. It is further desired that such assemblies be manufactured in a manner that is cost effective from a labor and/or a raw material perspective.

SUMMARY

Light emitting assemblies as disclosed herein comprise a plurality of Light Emitting Diode (LED) dies arranged in a fixed position relative to one another on a common substrate and a highly-reflective material can be interposed therebetween. The LED dies form an array and are positioned with respect to provide a desired optimum packing density. In an example embodiment, the LED array comprises a number of LED dies arranged in the form of a closed circle with one or more LED dies disposed within the circle. The LED dies are mounted on a substrate and are wired to one another and are attached to landing pads on the substrate for purposes of providing contact with an external electrical or source via a separate interconnect structure or the like.

A feature of light emitting assemblies as disclosed herein is that they are configured having a lens structure wherein each LED die comprises an optical lens disposed thereover. Each optical lens, or lens per die (LPD) is shaped and sized to promote optimal light transmission of each respective LED die, and thus form the LED array. The lens is formed from silicone that comprises phosphor particles dispersed therein. In an example embodiment, each optical lens has a diameter that is between about 1.5 to 3 times, and preferably between about 2 to 3 times the size of a respective LED die. The optical lenses are preferably shaped in the form of a hemisphere, and are sized such that the diameters of adjacent lenses do not overlap with one another.

The lens structure also comprises fillet segments that are interposed between adjacent LED dies and respective optical lenses. Such fillet segments are integral with adjacent optical lenses and are formed from same material as the optical lenses. In an example embodiment, the fillet segment has thickness as measured from the surface of the substrate that is less than about 1 times, and preferably less than about ½ times, the size of a respective LED die. In an example embodiment, the fillet segment has a radius of curvature between adjacent optical lenses, and provides a sufficient space between adjacent optical lenses so that the diameters of adjacent optical lenses avoid intersecting with one another.

Light emitting assemblies constructed in this manner display optimized LED die spatial arrangement/packing

density together with an optimized lens construction to provide a desired efficiently-packaged assembly having a high-light output/transmission when compared to conventional LED light-emitting assemblies.

BRIEF DESCRIPTION OF THE DRAWINGS

These and other features and advantages of light-emitting assemblies and methods for making the same as disclosed herein will be appreciated as the same becomes better understood by reference to the following detailed description when considered in connection with the accompanying drawings.

FIG. **1** is a perspective view of example embodiment light emitting assembly comprising an LED array made up of nine LED dies disposed a MCPCB substrate;

FIGS. **2***a* and **2***b* are perspective views of the example embodiment light emitting assembly of FIG. **1** that includes a lens disposed over each LED die;

FIG. **3** is a flowchart illustrating the steps used for making the example embodiment light emitting assembly of FIGS. **1** and **2**;

FIGS. **4***a* to **4***c* are top plan views of example embodiment light emitting assemblies having different sized lenses per dies;

FIG. **5** is a perspective view of an example embodiment light emitting assembly comprising an LED array made up of 9 LED dies with a lens over each LED die;

FIG. **6** is a perspective view of another example embodiment light emitting assembly comprising an LED array made up of 16 LED dies with a lens over each LED die;

FIG. **7** is a perspective view of another example embodiment light emitting assembly comprising an LED array made up of 18 LED dies with a lens over each LED die;

FIG. **8** is a cross sectional view of an example light emitting assembly as disclosed herein illustrating its connection to an interconnect substrate;

FIG. **9** is perspective view of the bottom surface of an example interconnect structure; and

FIG. **10** is a top perspective view of the interconnect structure of FIG. **9** supporting the light emitting assembly of FIG. **2**.

DETAILED DESCRIPTION

Light-emitting assemblies as disclosed herein comprise an LED array made up of a number of LED dies, wherein the LED dies are specially arranged in a predetermined manner so as to provide an efficient packing that produces an optimized light output, and wherein each LED die comprises a lens or lens per die (LPD) that is specially configured to provide an optimum light transmission. Reference will now be made in detail to some embodiments of such light-emitting assemblies, examples of which are illustrated in the accompanying drawings.

FIG. **1** is a top view of an example embodiment metal-core printed circuit board (MCPCB) substrate **10** on which an array of LED dies **12** are mounted. The LED dies are made by conventional method and are singulated from a wafer prior to attachment onto the substrate. Because the substrate **10** has a metal core, it would be difficult to supply power to the LED dies **12** through through-hole vias that pass from the LEDs through the printed circuit board to a bottom surface of the board. Thus, the LED dies **12** are electrically connected to landing pads **14** positioned on the top surface of the substrate **10**.

While substrate **10** has been illustrated in FIG. **1** as having a generally square configuration, it is to be understood that substrates as used for forming light-emitting assemblies as disclosed herein may be configured having various different geometric shapes based for example on the particular end-use application. Additionally, while the landing pads **14** are illustrated in FIG. **1** as being at the corners of the substrate, the placement and configuration of the landing pads can also vary. Such variations in substrate shape and landing pad location and configuration are understood to be within the scope of light-emitting assemblies as disclosed herein.

The LED dies are arranged on the substrate in a manner that provides optimal light output for an optimized spatial packing density, as the spatial packing density reflects a compromise based on the desired emitting area and photometric power. The particular example embodiment illustrated in FIG. **1** comprises an LED array made up of nine LED dies arranged in a special configuration; namely, with one LED die positioned in the middle and surrounded in circular fashion by eight LED dies. This LED die arrangement is desired as it enables the LED dies to be equally spaced apart from one another. The LED dies **12** are electrically connected both to one another and to the landing pads **14** by wire bonds **16**. The substrate surface comprises a highly-reflective material **18** that the LED dies are disposed upon.

In such example embodiment, the LED dies **12** are arranged relative to one another having an optimized packing density that is not too tight (so as to minimize or prevent adjacent LED die light output from interfering or being absorbed with one another), and that is not too loose (so as to increase the flux density and minimize the total space occupied by the LED dies). The LED dies are spaced apart in a predetermined manner calculated to provide optimal LED array light output while occupying a minimum amount of space.

In an example embodiment, is it desired that the LED dies be arranged relative to one another so that the distance between adjacent LED dies (as measured from the middle of each adjacent die) is about 2.2 times the die size, and in an example embodiment less than about 4 times, and preferably about 3 times or less, the die size. It is to be understood that the exact distance between adjacent LED dies in the array as disclosed herein may vary depending on such factors as the size and/or number of the LED dies. For a particular embodiment where the LED die size is approximately 45 mils (1.143 mm), a desired spatial distance between adjacent LED dies is approximately 3.4 mm.

FIG. **2***a* illustrates a light emitting assembly **19** comprising the LED array of FIG. **1**, comprising a lens structure **20** disposed over the LED dies. Specifically, the lens structure **20** comprises a lens **22** disposed over each individual LED die **12** or a lens per die (LPD). Accordingly, in such example embodiment, each LED die **12** comprises its own lens **22** that is disposed thereover. In an example embodiment, the lens structure is not provided as a preformed member, but is formed by using a suitable silicone material comprising a wavelength conversion material, such as phosphor particles or the like, dispersed therein. The silicone material is provided in a mold cavity having the desired LPD configuration, and the mold cavity and substrate are brought together under vacuum conditions, and the combined assembly is subjected to compressive force to form the desired lens structure by compression molding technique. Thus, in a preferred embodiment the individual LPDs and lens structure are formed in a single compression molding step.

FIG. **2***b* illustrates the light emitting assembly of FIG. **2***a*, and better shows the LPDs **22** as being configured having a hemispherical dome shape defined by a particular diameter or radius of curvature. Generally, it is desired to use the largest possible LPD diameter for a fixed number and arrangement/position of LED dies as long as the LPDs of adjacent LED dies do not overlap with one another, i.e., do not have hemispheres that overlap with one another, as such overlap may cause unwanted light transmission interference. Accordingly, the LPDs as disclosed herein are sized having a diameter engineered to provide an optimal light transmission for a fixed number and arrangement/position of LED dies.

In an example embodiment, it is desired that the LPDs each have a diameter that is between about 1.5 to 3 times the size of an LED die (measured as a side length) that it is disposed over. It has been discovered that having a diameter less than about 1.5 times the LED die size is undesired because it will produce a decrease in the desired luminous output. It is theorized that such a result may be due to a reduced phosphor mean free path, causing light emitted from the LED die to be reflected back onto the LED die and not transmitted outwardly therefrom. Additionally, light produced by the LED die may be confined within the LPD when sized too small because the LED die is not centered to the LPD and, thus may be prone to internal reflection also reducing light transmission. Having a LPD diameter greater than about 3 times the LED die size, for a given number and arrangement/position of LED dies, can cause overlapping of adjacent LPDs, which as noted above is not desired for the interference in light transmission that that may occur between adjacent LED dies.

In a preferred embodiment, where the LED die size is approximately 45 mils, it is desired that LPD have a diameter that is between about 2 to 3 times the size of a respective LED die. In an example embodiment where the LED die size is approximately 45 mils and the LED dies are arranged in the manner disclosed above, a LPD die size of approximately 2.8 mm or 2.45 times the LED die size provides an optimum level of light transmission efficiency for the optimized LED array packaging size.

Referring still to FIG. **2***b*, while the LPDs **22** in the lens structure **20** are sized so as to avoid overlapping, i.e., of the adjacent hemispheres, adjacent LPDs are connected to one another via fillets or filler regions **26** (as best illustrated in FIGS. **4***d*, **5** and **6**), which are formed integrally with the LPDs and that are essentially thin sections of the lens material that extend between adjacent LPDs **22**. The fillets result from the compression molding process and, in an example embodiment, the fillets have a thickness (as measured from the surface of the substrate) of less than about one times the size of the LED dies, and preferably less than about ½ the size of the LED dies. The fillets may be formed having a concave radiused-shape or having a sharp v-shape between adjacent LPDs.

FIG. **3** is a flow chart illustrating the steps involved in forming a light-emitting assembly as disclosed herein. In a first step **30** the LED dies are arranged on the MCPCB substrate to form a desired LED array having the disclosed packing density or spacing. In a second step **32**, the LED dies are wire bonded to one another and to the substrate landing pads. In a third step **34**, a silicone material is disposed within a mold cavity designed having a LPD size as disclosed above, and the substrate is lowered into the mold, and the assembly of the substrate and the mold are subjected to pressure in a vacuum environment. In a fourth step **36**, the pressure is removed and the mold is removed from the substrate to produce the light-emitting assembly comprising the LED array having optimized LED packing and optimized LPD sizing to provide optimal light output efficiency.

FIGS. **4***a* to **4***c* illustrate a top view of different example embodiment light-emitting assemblies **40** that is the same or similar to that shown in FIG. **2**, comprising nine LED dies **42** that each have a size of approximately 45 mils (1.143 mm), and that are arranged on the substrate **44** in the manner described above. Each assembly **40** comprises nine LPDs **46** that are disposed on each of the LED dies **42**, and that are sized and shaped in the same manner as described above.

Specifically, FIG. **4***a* illustrates a light emitting assembly **40** comprising LPDs having a size of approximately 2 mm (or 1.75 times the LED die size), while FIG. **4***b* illustrates a light emitting assembly **40** comprising LPDs having a size of approximately 2.8 mm (or 2.45 times the LED die size), and while FIG. **4***c* illustrates a light emitting assembly **40** comprising LPDs having a size of approximately 3.4 mm (or 2.97 times the LED die size).

FIG. **5** illustrates an example embodiment light-emitting assembly **47** (similar to that illustrated in FIG. **2***b*) comprising an LED array made up of 9 LED dies (not visible) that are disposed on an MCPCB substrate **48**, and where each LED die is covered by a lens **49**. The LED dies are arranged as disclosed above with respect to the embodiment illustrated in FIGS. **2***a* and **2***b*. The LED dies in this arrangement are positioned at a distance relative to one another as disclosed above to provide the desired packing density, and the LPDs are sized and shaped in the manner disclosed above to provide the combined properties of optimal light transmission efficiency and minimal packaging size.

FIG. **6** illustrates another example embodiment light-emitting assembly **50** comprising an LED array made up of 16 LED dies (not visible) that are disposed on an MCPCB substrate **52**, and where each LED die is covered by a lens **54**. The LED dies are arranged with four LED dies disposed within a circular arrangement of twelve LED dies, wherein the four LED dies arranged in two pairs of two. The LED dies in this arrangement are positioned at a distance relative to one another as disclosed above to provide the desired packing density, and the LPDs are sized and shaped in the manner disclosed above to provide the combined properties of optimal light transmission efficiency and minimal packaging size. In an example embodiment, the LED dies have a size of approximately 33 mils (0.84 mm), and a LPD dimension is approximately 2 mm, or 2.4 times the LED die size.

FIG. **7** illustrates another example embodiment light-emitting assembly **60** comprising an LED array made up of 18 LED dies (not visible) that are disposed on an MCPCB substrate **62**, and where each LED die is covered by a lens **64**. The LED dies are arranged with six LED dies disposed within a circular arrangement of twelve LED dies, wherein the six LED dies arranged in three pairs of two. The LED dies in this arrangement are positioned at a distance relative to one another as disclosed above to provide the desired packing density, and the LPDs are sized and shaped in the manner disclosed above to provide the combined properties of optimal light output efficiency and minimal packaging size. In an example embodiment, the LED dies have a size of approximately 33 mils (0.84 mm), and a LPD dimension is approximately 2 mm, or 2.4 times the LED die size.

FIG. **8** illustrates a sectional view of a connection between the light emitting assembly **70** as disclosed herein with an interconnect substrate **72**. In an example embodiment, the interconnect substrate **72** is configured having electrical

contact points **74** that are positioned to make contact with the landing pads **76** of the substrate when brought into position and contact with one another to facilitate the passage of electricity to the light emitting assembly. It is to be understood that this is but one example embodiment of how the light emitting assembly may achieve electrical connection with an interconnect substrate, and that the particular manner in which such electrical interconnection is achieved can and will vary depending on the particular end-use application and device configuration.

FIG. **9** illustrates a bottom surface **80** of an interconnect substrate **82** that can be used in conjunction with the light emitting assemblies as disclosed herein. The interconnect substrate **82** is formed from an electrically insulating material and includes a recessed section or an indentation **84** that is configured to accommodate placement of a light emitting assembly substrate (such as the one illustrated in FIG. **2**) therein. The recessed section **84** includes a pair of electrical contact pads **86** positioned to cooperate with and provide an electrical connection with the landing pads on the assembly substrate. The interconnect substrate **82** includes a central opening **88** sized for placement of the LED array on the light emitting assembly substrate therethrough (as best illustrated in FIG. **10**). This is but one example interconnect substrate configuration provided for reference, and it is to be understood that many other configurations of the same that provide the same basic function of providing an electrical interface with the light emitting assembly are equally covered herein.

FIG. **10** illustrates a top surface **90** of the interconnect substrate **82** illustrated in FIG. **8**, now including a light emitting assembly **92** (as illustrated in FIG. **2** and as disclosed herein) attached from the bottom surface with its LED array extending through the central opening **88**, and with its landing pads (not shown) in electrical connection with the interconnect substrate contact pads. The interconnect substrate **82** includes contact pads **94** on its top surface to facilitate connection with an external construction or fixture (not shown) having a source of electricity thereto. Constructed in this manner, the interconnect substrate functions to facilitate an electrical connection between the external construction or fixture to the light emitting assembly.

A feature of light-emitting assemblies as disclosed herein is the construction of a LED array that is intentionally engineered to be compact and space efficient to provide optimized light output, and that make use of individual LED die lenses that are specially configured and that are formed in a single mold process to optimize light transmission efficiency, thereby resulting in a highly-compact and efficient light source. Light-emitting assemblies as disclosed herein are formed on a substrate having surface mounted electrical contacts configured for use with a variety of different interconnect substrates to facilitate use in a number of different lighting fixtures to meet the needs of a variety of end-use lighting applications.

Although certain specific embodiments have been described and illustrated for purposes or reference, it is to be understood that the disclosure and illustrations as provided herein not limited to the specific embodiments. Accordingly, various modifications, adaptations, and combinations of various features of the described embodiments can be practiced without departing from the scope of the invention as set forth in the claims.

What is claimed is:

1. A light emitting assembly comprising:

a plurality of Light Emitting Diode (LED) dies arranged on a common substrate; and

an optical lens disposed over each LED;

wherein adjacent optical lenses include a connecting segment extending therebetween.

2. The light emitting assembly as recited in claim **1** wherein the connecting segment is integral with the optical lenses.

3. The light emitting assembly as recited in claim **1** wherein the optical lens is hemispherical in shape.

4. The light assembly as recited in claim **1** wherein the optical lens is sized about 1.5 to 3 times the size of a respective LED die.

5. The light assembly as recited in claim **1** wherein the common segment has thickness as measured from the surface of the substrate that is less than about 1 times the size of a respective LED die.

6. The light assembly as recited in claim **1** wherein the LEDs are spaced apart from one another such that the diameters of adjacent optical lenses avoid intersecting with one another.

7. The light emitting assembly as recited in claim **1** wherein the optical lens is formed from an optically transparent material comprising particles of phosphor dispersed therein.

8. The light emitting assembly as recited in claim **1** comprising a reflective material interposed between the LED dies and the common substrate.

9. The light emitting assembly as recited in claim **1** connected with an interconnect substrate, wherein the common substrate is in electrical connection with the interconnect substrate.

10. The light emitting assembly as recited in claim **1** wherein a number of the LED dies are arranged in series to form a closed perimeter.

11. A method for making a light emitting assembly comprising the steps of:

arranging a plurality of Light Emitting Diode (LED) dies on a substrate; and

forming optical lenses over each of the LED dies, wherein the lenses are sized greater than a respective LED die, and wherein a common segment of lens material extends between at a pair of adjacent optical lenses.

12. The method as recited in claim **11** wherein during the step of forming the optical lenses, the lenses have a hemispherical shape.

13. The method as recited in claim **11** wherein the common segment is formed during the step of forming the optical lenses.

14. The method as recited in claim **11**, wherein the common segment is integral with the pair of adjacent optical lenses.

15. The method as recited in claim **11** wherein the step of forming the lenses takes place by molding process.

16. The method as recited in claim **11** wherein the common segment has a thickness less than a thickness the lenses as measured from the substrate.

17. The light emitting assembly as recited in claim **11** wherein during the step of arranging, a number of the LED dies are arranged in series to form a closed perimeter.

18. A method for making a light emitting assembly comprising the steps of:

arranging a plurality of Light Emitting Diode (LED) dies on a substrate, wherein a number of the LED dies are serially arranged to form a closed parameter; and

forming optical lenses over each of the LED dies by molding process.

19. The method as recited in claim **18** wherein the optical lenses are sized greater than a respective LED die, and wherein the lenses are hemispherical in shape.

20. The method as recited in claim **18** further comprising during the step of forming optical lenses, forming a common segment between a pair of adjacent lenses.

* * * * *